Connect Tech Inc.

Embedded Computing Experts

www.connecttech.com

USERS GUIDE

Blue Heat/Net Sync

Ethernet-to-Serial Synchronous Communications

Connect Tech Inc.
42 Arrow Road
Guelph, Ontario
N1K 1S6
www.connecttech.com

Tel: **519-836-1291**
Toll: **800-426-8979** *(North America only)*
Fax: 519-836-4878
Email: sales@connecttech.com
support@connecttech.com

CTIM-00044 Revision 0.06 2019-09-24

Limited Lifetime Warranty

Connect Tech Inc. provides a Lifetime Warranty for all Connect Tech Inc. products. Should this product, in Connect Tech Inc.'s opinion, fail to be in good working order during the warranty period, Connect Tech Inc. will, at its option, repair or replace this product at no charge, provided that the product has not been subjected to abuse, misuse, accident, disaster or non Connect Tech Inc. authorized modification or repair.

You may obtain warranty service by delivering this product to an authorized Connect Tech Inc. business partner or to Connect Tech Inc. along with proof of purchase. Product returned to Connect Tech Inc. must be pre-authorized by Connect Tech Inc. with an RMA (Return Material Authorization) number marked on the outside of the package and sent prepaid, insured and packaged for safe shipment. Connect Tech Inc. will return this product by prepaid shipment service.

The Connect Tech Inc. lifetime warranty is defined as the serviceable life of the product. This is defined as the period during which all components are available. Should the product prove to be irreparable, Connect Tech Inc. reserves the right to substitute an equivalent product if available or to retract lifetime warranty if no replacement is available.

The above warranty is the only warranty authorized by Connect Tech Inc. Under no circumstances will Connect Tech Inc. be liable in any way for any damages, including any lost profits, lost savings or other incidental or consequential damages arising out of the use of, or inability to use, such product.

Copyright Notice

The information contained in this document is subject to change without notice. Connect Tech Inc. shall not be liable for errors contained herein or for incidental consequential damages in connection with the furnishing, performance, or use of this material. This document contains proprietary information that is protected by copyright. All rights are reserved. No part of this document may be photocopied, reproduced, or translated to another language without the prior written consent of Connect Tech, Inc.

Copyright © 2019 by Connect Tech Inc.

Trademark Acknowledgment

Connect Tech Inc. acknowledges all trademarks, registered trademarks and/or copyrights referred to in this document as the property of their respective owners.

Not listing all possible trademarks or copyright acknowledgments does not constitute a lack of acknowledgment to the rightful owners of the trademarks and copyrights mentioned in this document.

Customer Support Overview

If you experience difficulties after reading the manual and/or using the product, contact the Connect Tech reseller from which you purchased the product. In most cases the reseller can help you with product installation and difficulties.

In the event that the reseller is unable to resolve your problem, our highly qualified support staff can assist you. Our support section is available 24 hours a day, 7 days a week on our website at: http://connecttech.com/support/resource-center/. See the contact information section below for more information on how to contact us directly. Our technical support is always free.

Contact Information

Mail/Courier
Connect Tech Inc.
Technical Support
42 Arrow Road
Guelph, Ontario
Canada N1K 1S6

Email/Internet

sales@connecttech.com
support@connecttech.com
www.connecttech.com

Note:
Please go to the Connect Tech Resource Center for product manuals, installation guides, device drivers, BSPs and technical tips. Submit your technical support questions to our support engineers.

Telephone/Facsimile
Technical Support representatives are ready to answer your call Monday through Friday, from 8:30 a.m. to 5:00 p.m. Eastern Standard Time. Our numbers for calls are:

Toll Free: 800-426-8979 (North America only)
Telephone: 519-836-1291 (Live assistance available 8:30 a.m. to 5:00 p.m. EST, Monday to Friday)
Facsimile: 519-836-4878 (on-line 24 hours)

ESD Warning

Electronic components and circuits are sensitive to ElectroStatic Discharge (ESD). When handling any circuit board assemblies including Connect Tech COM Express carrier assemblies, it is recommended that ESD safety precautions be observed. ESD safe best practices include, but are not limited to:

- Leaving circuit boards in their antistatic packaging until they are ready to be installed.
- Using a grounded wrist strap when handling circuit boards, at a minimum you should touch a grounded metal object to dissipate any static charge that may be present on you.
- Only handling circuit boards in ESD safe areas, which may include ESD floor and table mats, wrist strap stations and ESD safe lab coats.
- Avoiding handling circuit boards in carpeted areas.
- Try to handle the board by the edges, avoiding contact with components.

Revision History

Revision	Date	Changes
0.06	2019-09-24	Baud rate changed; Updated User Guide Format

Certification Statements

Preliminary: Testing is still pending.

Class A Computing Device

Connect Tech Inc. declares that the product(s) covered by the contents of this manual have been tested and found compliant with the below listed standards as required by the Electromagnetic Compatibility (EMC) Directive for General Immunity Compliance.

EN 55022 CISPR 22	Conducted and Radiated emissions Class A
EN 55024	Immunity to Disturbances

EN 61000-4-2	EN 61000-4-4	EN 61000-4-6	EN 61000-3-2 Exempt
EN 61000-4-3	EN 61000-4-5	EN 61000-4-11	EN 61000-3-3 Pass

The above satisfy the requirements of:

USA:	FCC – CFR47, Part 15, part 2	FC
Canada:	ICES-003	
Europe	EMC Directive	CE
Japan:	VCCI	
Australia/New Zealand:	AS/NZS	

Preliminary: Testing is still pending.

Table of Contents

Limited Lifetime Warranty 1
Copyright Notice 2
Trademark Acknowledgment 2
Customer Support Overview 3
Contact Information *3*
ESD Warning *4*
Revision History 4
Certification Statements 5
Table of Contents 6
List of Figures 8
List of Tables 8
Introduction 9
Features *9*
Understanding Virtual COM Ports *10*
Blue Heat/Net Sync Installation Overview 10
Hardware Installation 11
Connecting the Blue Heat/Net Sync to Your Network: *11*
Ethernet LEDs *11*
Serial Port LEDs *12*
Connecting Serial Devices *12*
V.28 Connections: *12*
Basic Async (V.28) RS-232 Null Modem Connection 12
Basic Sync (V.28) RS-232 Connection (Provides Clock) 12
Basic Sync (V.28) RS-232 Connection (Receives Clock) 13
RS-422/V.11 Connections *13*
Blue Heat/Net Synchronous Clocking *14*
Loopback Connectors *14*
Connecting Power *16*
DC Power Connector 16
Phoenix Locking Screw Terminal Connector 16
Activating the Special Operations Mode and Default Settings *18*
Using the Reset Button to Activate the Special Operations Mode *18*
Selecting a Special Operation *18*
Power On Diagnostics: *19*
LED Error Codes *19*
SCM Cabling requirements *22*
SCM: Serial Configuration Manager *22*
Setting a Static or Dynamic IP Address *23*
Set the IP Address Using the Web Configuration Manager *23*
Set the IP Address Using the Serial Configuration Manager *23*
Blue Heat/Net Sync Configuration 24
CDS (Configuration Data Space) *25*
Description *25*
Access to CDS Parameters *25*
SCM (Serial Configuration Manager) *26*
Description *26*
Getting Access to the SCM *26*
SCM Command Reference *26*
Brief Command List 26
Command Details 27
boot 27
cfg 27
exit 28
help 28
info 28
net 29
save 30
update 30

WCM (Web Configuration Manager) *32*
Signing In to the Web Configuration Manager *32*
Configure Advanced Serial Settings 34
Configure Blue Heat/Net Sync Settings 34
Configure Firmware 36
Restore Defaults 36
Saving To Flash 37
Monitoring Your Blue Heat/Net *38*
Monitor Serial Port Traffic 38
Monitor Network Traffic 39
Monitor TCP/IP Statistics 39
My Blue Heat/Net Sync 39
Software Installation for Windows 41
Installing the Blue Heat/Net Sync Configuration Manager *41*
Running the Configuration Manager *45*
Configure Default Blue Heat/Net Sync *45*
Auto Discover Blue Heat/Net Sync *46*
Firmware Upgrades 47
Upgrade using WCM (Web Configuration Manager) *47*
Upgrade using SCM (Serial Configuration Manager) *47*
Software Development 48
Memory Map of IUSC and PLD Functions *50*
ColdFire (5272) Bus: 50
IUSC Access: 50
PLD Resource Access: 51
PLD Memory Map Table *51*
Port Settings, Clock Setup and General Settings *61*
IUSC Clocking Logic: *63*
Appendix 65
Blue Heat/Net Sync Specifications *65*
Operating Environment *65*
Communications *65*
ESD Protection *65*
Power *65*
Connectors *65*
Dimensions *65*
Cable and Power Supply Options *65*
Protocol Descriptions *66*
Pinouts *67*
DB-25 Female Pinouts *67*
DB-9 Female Pinouts *68*
Multi-drop Communications Using V.11 / RS422/RS485 Line Modes *69*
Rack Mount Option: *69*
Default Settings *70*
Network Settings *70*
Boot Settings *70*
SCM Operation Settings *70*
Common Configuration Setups *71*
Static IP Setup *71*
Using SCM 71
Using WCM 71
DHCP Setup *72*
Using SCM 72
How the Blue Heat/Net Sync Boots Up *72*
Bootup Sequence *73*
Flowchart of Special Operations Mode using the reset button *74*
Asynchronous Communications Tutorial *74*
Serial Line Interface Tutorial *75*
RS-232 Line Interface: *75*
Differential Line Interfaces: *75*
RS485/RS422/V.11 Details *75*

Basic 4-Wire, Full Duplex Communications: 76
Multi-drop 4-Wire, Full Duplex Communications: 77
Basic - Wire, Half Duplex Multi-drop Connection: 77
Bus Contention on Differential Multi-drop Networks: 78
Termination Resistors in Differential Networks 79
Termination Resistors in Differential Networks: 79

List of Figures

Figure 1: LED Locations on Blue Heat/Net Sync 12
Figure 2: Basic V.28 Asynchronous Connections 12
Figure 3: Basic V.28 Synchronous Connections 13
Figure 4: Basic V.28 Synchronous Connections 13
Figure 5: Basic RS-422/V.11 Asynchronous Connections 13
Figure 6: Basic RS422/V.11 Synchronous Connections 14
Figure 7: Recommended Pinouts for V.28 (RS-232) Loopback Connector 15
Figure 8: Recommended Pinouts for a V.11 (RS422) Loopback Connector 15
Figure 9: DC Power Connector Illustration 16
Figure 10: Phoenix Locking Screw Terminal Power Connector Illustration 16
Figure 11: LED Error Code Example 20
Figure 12: Blue Heat/Net Sync Serial Cable Connection Diagram 22
Figure 13: Web Configuration Manager Sign In 32
Figure 14: Blue Heat/Net Sync Settings 33
Figure 15: Configuring Blue Heat/Net Sync Settings 36
Figure 16: Firmware Upgrades/Downloads 36
Figure 17: Restore Default Settings 37
Figure 18: Saving To Flash 38
Figure 19: Monitoring Serial Port Activity 38
Figure 20: Monitoring Network Traffic 39
Figure 21: Monitoring TCP/IP Statistics 39
Figure 22: My Blue Heat/Net Sync Hardware Details 40
Figure 23: My Blue Heat/Net Sync Software Details 40
Figure 24: Blue Heat/Net Sync Driver/Software Installation CD 41
Figure 25: Blue Heat/Net Sync Software Installation Screen 42
Figure 26: My Blue Heat/Net Sync Places Screen 45
Figure 27: Add or Auto Discover Blue Heat/Net Sync Menu Screen 45
Figure 28: Auto Discover Blue Heat/Net Sync Screen 46
Figure 29: Bootup Sequence 73
Figure 30: Bootup Sequence via Reset Button 74
Figure 31: Typical Asynchronous Date Frame 75

List of Tables

Table 1: BlueHeat/Net Sync Power Connections and Current Specifications 17
Table 2: Connector Properties 17
Table 3: Available Special Operations 19
Table 4: LED Error Codes for Blue Heat/Net Sync 20
Table 5: Chip Selects 48
Table 6: Interrupts 49
Table 7: ColdFire MCF5272 GPIO 49
Table 8: Base Address Map 50
Table 9: DB-25 Female Pinouts 67
Table 10: DB-9 Female Pinouts 68

Introduction

Connect Tech's Blue Heat/Net Sync allows remote access to synchronous/asynchronous serial devices via an Ethernet LAN or the Internet. Blue Heat/Net Sync network-enables serial communication devices that are designed to be connected to serial ports so that the devices no longer need to be tied to a single computer.

The Blue Heat/Net Sync hardware is simple to install as it involves little more than plugging the unit into the appropriate locations and performing the configuration steps outlined in this manual.

Driver setup is made easy by Blue Heat/Net Sync's auto-detection feature. The software does the work of locating the units, while the Configuration Manager leads you through the rest of the installation.

Blue Heat/Net Sync's firmware is easily configured with a choice of methods: web browser, Telnet, or direct serial connection with a terminal and/or terminal software. Once the Blue Heat/Net Sync has been configured to your specifications, you will be able to remotely access your devices immediately.

Features

- Four software selectable synchronous or asynchronous serial ports
- Software switchable; V.28, V.10, V.11, V.35, EIA-530, X.21 line modes
- Software switchable line modes and termination
- Supports NRZ, NRZB, NRZI-Mark, NRZI-Space, B-Phase-Space, B-Phase-Manchester, Differential Bi-Phase encoding
- Transmission rates up to 115kbps (synchronous), 230.4 Kbps (asynchronous), possibly higher depending on application
- Bipolar clock input accepts sine/square wave signals up to 20 MHz +/- 10V.
- Includes synchronous protocols; SDLC, HDLC, MonoSync, BiSync, Transparent BiSync
- Software selectable internal and external clocking modes. External clocking is provided on TXC and RXC pins
- Supports IP, TCP, UDP, ARP, RARP, TFTP, DHCP, BOOTP, HTTP, Telnet and DNS
- Use of TCP/IP means communications can be routed to support WANs, as well as LANs. The Blue Heat/Net Sync does not need to be located at the same site as the controlling computer
- Raw TCP server (HDLC and External Sync Line Modes only)
- Several levels of security are built into the Blue Heat/Net Sync that can limit connections and help to ensure the privacy of data flow
- Memory: 8 MB flash, 16 MB SDRAM
- Includes an auto-MDIX 10Base-T, 100Base-TX LAN interface
- Network boot or booting from built-in flash memory
- Firmware upgrades are downloadable
- Customizable uClinux embedded operating system running on a ColdFire embedded processor.
- Configuration can be done via Web Browser, Telnet or direct serial connection
- Front mounted diagnostic LEDs
- 5-28 VDC power input using either DC barrel or Phoenix screw terminal connector Optional 5VDC power supply available
- 1U rack mount kit available

Understanding Virtual COM Ports

In a typical serial port setup, the application communicates directly with the connected serial port hardware.

Virtual COM ports differ in that the application communicates with a network protocol layer that transfers the necessary information to and from the remote serial ports. The virtual ports appear as standard serial ports to the application, but in reality the data is translated into a series of Ethernet messages between the Blue Heat/Net Sync unit and the host computer. The serial port is not physically connected to the host computer, but this is transparent to the application trying to access it.

There are several advantages to using virtual COM ports, which include:

- **Distance** – The serial ports can be a great distance away from the host computer. They are not limited by the standard electrical characteristics of the RS-232 or RS-422 interface because the primary data transfer is being done via Ethernet. Depending on the set up, these serial ports can be at a different location and the Internet can act as the carrier of the serial port traffic.
- **Speed** – Short RS-232/422 cable lengths can be used with the primary distance relying on the network connection. The capacitance of long lengths of serial cable does not limit data speeds in these cases.
- **Cabling** – Cost effective Ethernet cabling can be used for the transfer of information to the Blue Heat/Net Sync and often this is part of the existing networking infrastructure. Connecting serial ports in a remote location can be as easy as plugging in a Blue Heat/Net Sync to the Ethernet network. This provides a simple, clean cabling arrangement.
- **Port Sharing** – In some applications it is desirable to have a serial resource that is accessed and shared by more than one host computer. Connect Tech's virtual serial port technology allows this to be done easily.
- **Routing** – Different ports on a Blue Heat/Net Sync can be connected to multiple host computers.
- **Monitoring** – Because the virtual serial ports are on the network, they can easily be monitored to ensure everything is operating correctly.

Blue Heat/Net Sync Installation Overview

There are three main stages in the installation process for your Blue Heat/Net Sync.

1. Hardware Installation
   This involves the physical connection of the Blue Heat/Net Sync hardware to your network, and addresses issues such as cabling and power requirements.

2. Blue Heat/Net Sync Configuration
   The first step in the configuration process is to set the IP Address. Then use one of three available methods to configure the Blue Heat/Net Sync firmware settings for your application. This can be done through the SCM (Serial Configuration Manager) or the WCM (Web Configuration Manager), depending on circumstances and personal preference.

3. Software Installation for Windows
   This step installs and configures the Blue Heat/Net Sync drivers and ports for your host Operating System and allows you to set parameters specific to your serial requirements. This is done via the Blue Heat/Net Sync Configuration Manager.

NOTE: Software support for Windows and Linux is still in development

Hardware Installation

Connecting the Blue Heat/Net Sync to Your Network:

Before you begin, take a minute to ensure that your package includes the required components for your Blue Heat/Net Sync:

- One Blue Heat/Net Sync unit
- One power supply
- One CD containing software and documentation
- One Phoenix contact screw terminal plug PN: 1847055
- One RJ-45 cable (optional)

If any of these components is missing, contact Connect Tech or your reseller.

Ethernet LEDs

The front panel of the Blue Heat/Net Sync features Ethernet and serial port LEDs to monitor activity.

Power: When this LED is on, the Blue Heat/Net Sync is receiving power.
CPU: Once the uClinux firmware is booted and running correctly, this LED lights up.
10/100*:* This LED represents the line rate at which the Blue Heat/Net Sync is connected to your network.

- LED on = a 100 megabit connection.
- LED off = a 10 megabit connection.

(The Blue Heat/Net Sync automatically detects the line rate of your network).
L/A: This light illuminates when the connection to your network or computer is achieved.
A blinking light indicates that Transmit (Tx) or Receive (Rx) activity is detected on the Ethernet cable.
FD: Indicates that your network is running in full duplex or half duplex mode:
ON = full duplex, OFF = half duplex

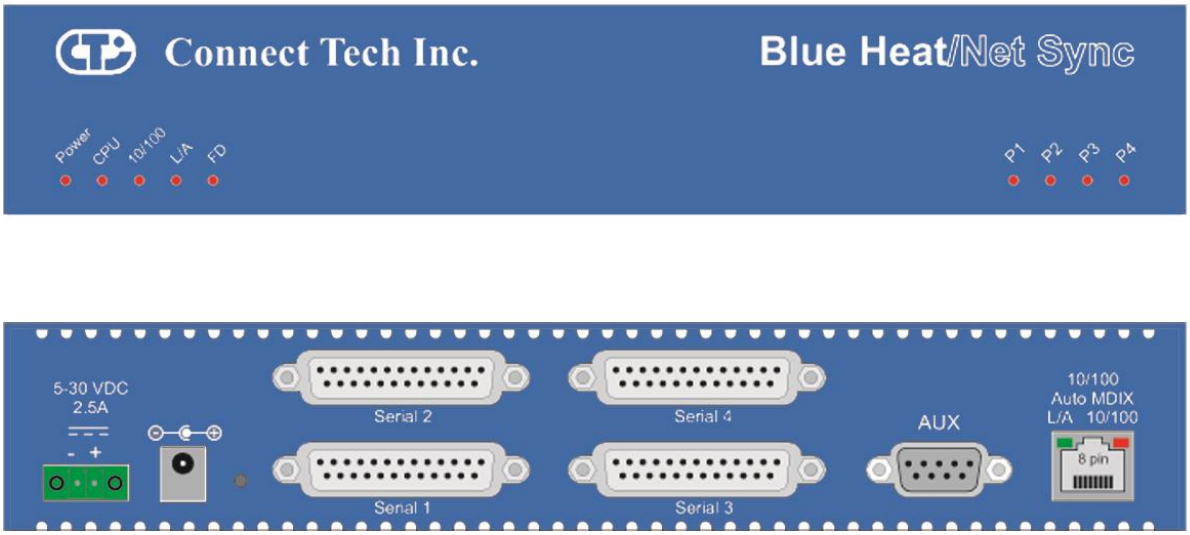

Figure 1: LED Locations on Blue Heat/Net Sync

Serial Port LEDs

The serial ports LEDs indicate serial activity for each port.

- A flashing LED indicates that the port in question is receiving or transmitting data.

Connecting Serial Devices

V.28 Connections:

V.28 has signaling levels the same EIA RS232.

Basic Async (V.28) RS-232 Null Modem Connection

This is the typical way to connect a Blue Heat/Net Sync to another serial device.

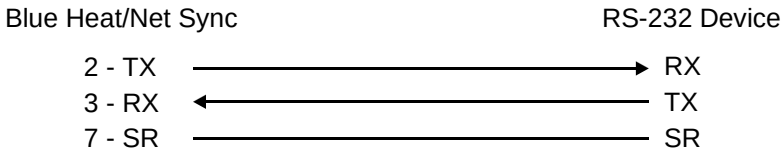

Figure 2: Basic V.28 Asynchronous Connections

Basic Sync (V.28) RS-232 Connection (Provides Clock)

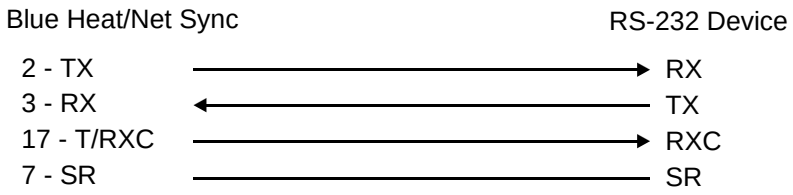

Figure 3: Basic V.28 Synchronous Connections

Basic Sync (V.28) RS-232 Connection (Receives Clock)

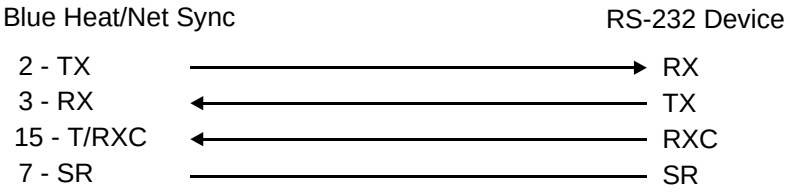

Figure 4: Basic V.28 Synchronous Connections

NOTE: The Blue Heat/Net Sync clock signals are bidirectional. See Blue Heat/Net Sync Clocking for more details.

RS-422/V.11 Connections

The following are basic connections that can be accomplished when the I/O levels are in V.11 (RS-422) mode. V.11 mode signaling can be enabled with EIA-530, RS-449 or X.21 modes on your Blue Heat/Net Sync.

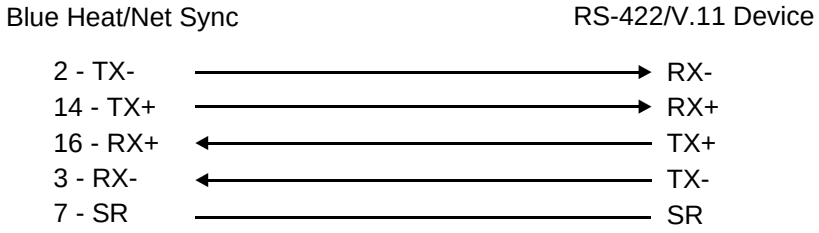

Figure 5: Basic RS-422/V.11 Asynchronous Connections

Figure 6: Basic RS422/V.11 Synchronous Connections

NOTE: Blue Heat/Net Sync clock signals are bidirectional. The Blue Heat/Net Sync can either source or receive a clock. See Blue Heat/Net Sync Clocking for more details.

Blue Heat/Net Synchronous Clocking

The clocking circuits on the Blue Heat/Net Sync are very flexible. The Blue Heat/Net Sync DB-25 clock pins are bi-directional. This means that the TXC or RXC pins can be inputs receiving a clock or outputs driving a clock. Functionally the two pins are equal. For example, the following clocking combinations are possible:

- RXC as clock input and TXC as clock input.
- RXC as clock output and TXC as clock output.
- RXC as clock input and TXC as clock output.
- RXC as clock output and TXC as clock input.

The Blue Heat/Net Sync receivers and transmitters can be clocked independently from any combination of the above or from internal clock sources.

Clocking is also available from the EXT_REF_CLK input pin on the DB-9 female.

Loopback Connectors

Loopback connectors are useful for performing diagnostics. The following figure illustrates the recommended pinouts for creating loopback connectors for Blue Heat/Net Sync.

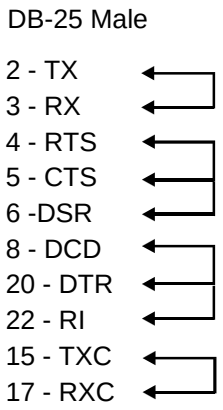

Figure 7: Recommended Pinouts for V.28 (RS-232) Loopback Connector

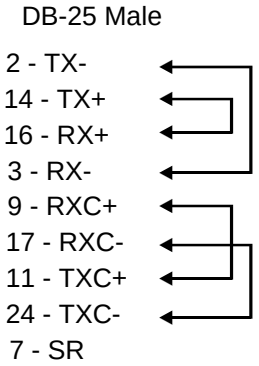

Figure 8: Recommended Pinouts for a V.11 (RS422) Loopback Connector

NOTES:
1. For an asynchronous loopback, omit the TXC and RXC pin.
2. When using clock signals, one signal must be configured as an input, while the other must be configured as an output.
3. When using a DB-25 female loopback connector, solder cup DB-25 connectors and 24 AWG solid core wire, such as wire from a CAT5 cable is recommended.

Connecting Power

The Blue Heat/Net Sync uses either a standard DC power jack or a Phoenix locking screw terminal connector for power input. The Blue Heat/Net Sync can be safely connected or disconnected at any time. The standard power supply requirements are as follows:

Model BMG006

- 5V (2.5A) power input using a DC barrel or Phoenix screw terminal connector. Rev A models.

- 5V (2.5A) – 28 V DC (450mA) power input using a DC barrel or Phoenix screw terminal connector. **Rev B or greater models only**.

DC Power Connector

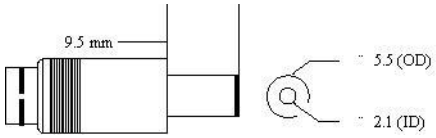

Figure 9: DC Power Connector Illustration

NOTE: The center is positive, outside is ground (0V).

Phoenix Locking Screw Terminal Connector

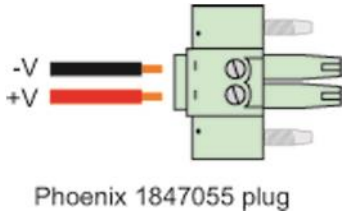

Figure 10: Phoenix Locking Screw Terminal Power Connector Illustration

Table 1: BlueHeat/Net Sync Power Connections and Current Specifications

BlueHeat/Net Description	Connector plug type	Connector Polarity	Voltage	Current
4 Port DB25 Synchronous / Asynchronous models (Rev A)		Centre Positive*	5VDC	875mA
		Left Positive*	5-28VDC	@5V=2500mA @28V=450mA
4 Port DB25 Synchronous / Asynchronous models (Rev B)		Centre Positive*	5-28VDC	@5V=2500mA @28V=450mA
		Left Positive*	5-28VDC	@5V=2500mA @28V=450mA

*Note: The power input is protected by a series diode to prevent damage in the case of a reverse polarity connection.

Table 2: Connector Properties

Type	Details	Part Number	Typical Wire Gauge
	Standard DC Barrel 2.1mmID / 5.5mmOD	Digi-Key: CP3-1000-ND, or equivalent	18-24 AWG Stranded
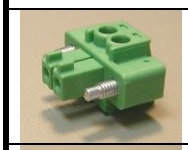	Locking Screw Terminal, 3.3mm pitch MC Series	Phoenix PN: 1847055, or equivalent	16-28 AWG Stranded
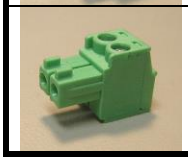	Screw Terminal, 3.5mm pitch MC Series	Phoenix PN: 1840366, or equivalent	16-28 AWG Stranded

Activating the Special Operations Mode and Default Settings

Blue Heat/Net Sync includes a push button on the rear of the unit beside the DC power connector. This push button can be used to perform special operations such as resetting the unit to its default settings or forcing port scanning in situations where the SCM is not accessible.

Using the Reset Button to Activate the Special Operations Mode

To activate the Special Operations Mode, hold the reset button while the unit is powering up. Hold the button until **all** the port LEDs blink rapidly and then release the reset button. The port LEDs will continue to flash rapidly after the reset button is released to indicate the Special Operations Mode is active.

Selecting a Special Operation

Once the Special Operations Mode has been activated, four operation options are available:

1. **Abandon the Special Operations Mode**
   To abandon the Special Operations Mode without selecting a special operation, press and hold the reset button for at least four seconds. While the button is pressed, the rapid flashing of the port LEDs will stop. After four seconds, the rapid flashing will resume and the reset button can be released. After the release of the reset button, the port LEDs will turn off, indicating that the Special Operations Mode has terminated.

2. **Cancel a Special Operation**
   If you need to cancel a special operation after it has been selected, repeatedly press the reset button until all the port LEDs begin to flash rapidly. Then abandon the Special Operations Mode by pressing the reset button for four seconds, as explained above.

3. **Select a Special Operation**
   Operations are selected by repeated **short presses** of the reset button. Each time the reset button is pressed it is counted and represented on the port LEDs as a binary number with the port 1 LED as the least significant bit (see Table 1). Choose the operation which you want to perform. If you miss the selection that you want, keep pressing the button. The count starts over again once it reaches 7 (1111 binary).

4. **Activate a Special Operation**
   To activate a selection, press and hold the reset button for at least four seconds. During this time the rapid flashing of the port LEDs will stop. Once the rapid flashing resumes you can release the reset button. The port LEDs will turn off indicating that the Special Operations Mode has been activated.

Table 3: Available Special Operations

Special Operation	Number of presses (and binary representation)	Usage
Force port scanning to first two ports (*Scanning runs until current scanning delay setting times out. Default is 30 seconds).*	ONE press 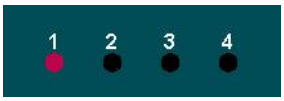	This forces the first two ports to RS-232 mode, causing the SCM to scan these ports and thereby allowing access to the SCM (see note below).
Force port scanning to all ports. (*Scanning runs until the SCM is entered or until the unit is powered down. There is no time out*).	TWO presses 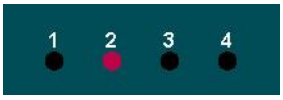	This forces all ports to RS-232 mode, therefore all ports are scanned for SCM use. The Blue Heat/Net Sync will behave in the same manner as an RS-232 only model (see note below).
Restore factory default settings	SEVEN presses 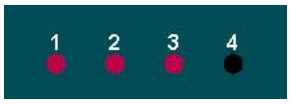	This restores the factory default settings for **ALL** configuration parameters.

NOTE: Why would I need to force port scanning?

Some line interface settings are inappropriate for SCM use. During boot up, the SCM scans only those ports set for RS-232 mode. If all of the ports are configured for another mode, (1/2 Duplex or Multi-drop) SCM port scanning is bypassed, and the SCM application cannot be accessed. Use of either of the "Force Port Scanning" operations outlined in Table 1 will force port scanning to occur so the SCM application can be accessed.

Power On Diagnostics:

LED Error Codes

If an error is detected during the bootup process, an error **condition** and **code** are displayed on the LEDs on the face of the Blue Heat/Net Sync.

- The error **condition** is signaled by a rapidly flashing CPU LED (about 10 to 20 per second).
- The error **code** is displayed on Port LEDs 1 to 4 as a binary number.

Figure 11: LED Error Code Example

In the above example, a rapidly flashing CPU LED during the boot up process signifies the Blue Heat/Net Sync has experienced an error. Port LEDs 1 through 4 signify which error has occurred. In this case, LED 2 and 3 are on, so the error code is 6. The chart below defines the error details for each error code.

Table 4: LED Error Codes for Blue Heat/Net Sync

Error Code and Event	Details	Suggested Corrective Action
1. Loader code in flash is erased. 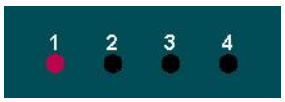	The regions of flash memory which hold the **loader code** are both erased. (There are two redundant loaders in flash that can be run).	This may occur in when there are ESD disturbances or in electrically noisy environments. If this error persists it may be a hardware issue. Contact Connect Tech.
2. Loader code in flash has a bad CRC. 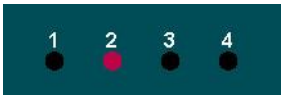	The regions of flash memory which hold the **loader code** both have CRC errors. (There are two redundant loaders in flash that can be run).	See corrective action for error code 1.
3. RAM copy of loader code has a bad CRC. 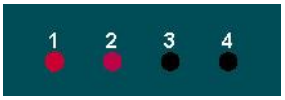	The l**oader code** is copied to RAM before execution. This error is shown if the RAM copy has a CRC error.	See corrective action for error code 1.

4. Configuration Data Space (CDS) areas have corrupted data (CRC failure). 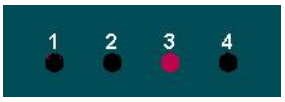	The CDS is copied from flash to RAM during the beginning of the **loader code**. If a CRC error is detected in the RAM copy, this error is shown.	See corrective action for error code 1.
5. Cannot obtain an operating system image (uClinux) to run. 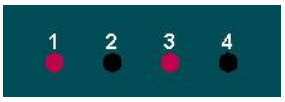	This will occur when **any** of the **enabled** boot sources (flash or BOOTP/TFTP or TFTP) fail to obtain a valid compressed operating system image to run.	Check network connections, server computer or your unit's settings. This error occurs if TFTP booting is enabled and the Blue Heat/Net Sync cannot download the file from the server. Contact Connect Tech if it persists.
6. Unexpected return from the uClinux operating system. 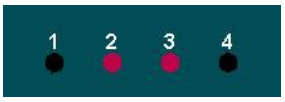	This error occurs if the operating system returns back to the loader.	See corrective action for error code 1.
7. CDS re-programming failure. 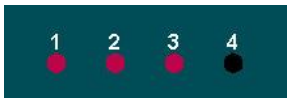	Certain CDS items are updated during the bootup. If a failure occurs during the re-programming of the flash, this error will occur.	See corrective action for error code 1.
8. Boot count could not be incremented in flash memory 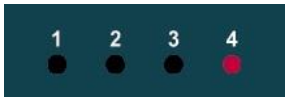	This error is usually caused by a Flash memory failure.	Contact Connect Tech.

9. No ports found 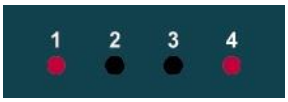	This message usually indicates a UART component failure.	Contact Connect Tech.
15. Mismatched CDS version number 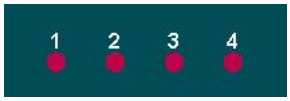	uClinux checks the CDS version number against its expected CDS version number. If they are different, uClinux does not continue its operation.	If you have updated the uClinux code via SCM and have not updated the loader/SCM code, this error appears on reboot. Update companion loader code and reboot.

SCM Cabling requirements

SCM: Serial Configuration Manager

The Serial Configuration Manager is used to configure the Blue Heat/Net Sync via a serial port and is discussed in greater detail later in this document. To access the Serial Configuration Manager you will need to connect an RS-232 (V.28) serial cable from your standard computer serial port to any RS-232 (V.28) port on the Blue Heat/Net Sync. The cabling required to connect to the Blue Heat/Net Sync is as follows:

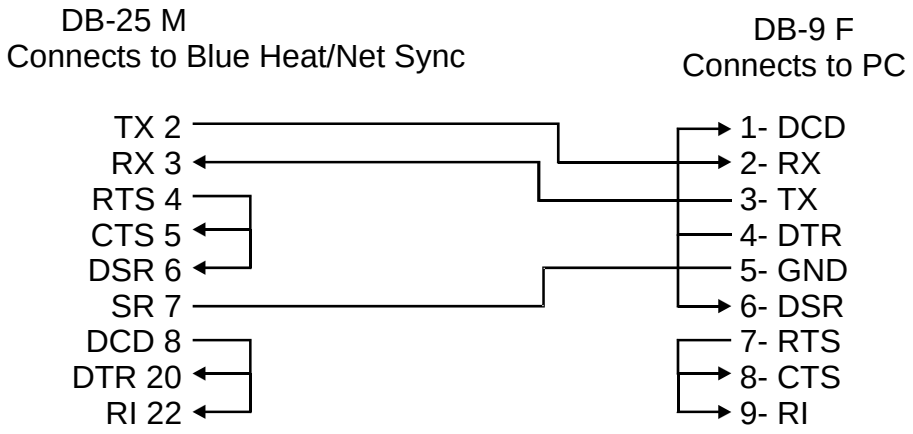

Figure 12: Blue Heat/Net Sync Serial Cable Connection Diagram

The key signal connections are RX, TX and GND. The other signals may not be required in your application. If you are assembling your own SCM cable, we recommend that all of the above connections be made.

Setting a Static or Dynamic IP Address

Prior to configuring the Blue Heat/Net Sync, you must set a static or dynamic IP address. The default IP address of a new Blue Heat/Net Sync is 192.168.42.1. If there is a possibility that this has been changed, you will need to find the current IP address setting before you begin.

The easiest way to get the IP address of your Blue Heat/Net Sync is as follows:
Follow the steps outlined in the section Installing the Blue Heat/Net Sync Configuration Manager and noting your Blue Heat/Net Sync's IP number (i.e. **A.B.C.D**) using the Auto Discover Blue Heat/Net Sync feature**.**

Set the IP Address Using the Web Configuration Manager

NOTE: If you use the Windows Configuration Manager and use Auto Discover to locate your Blue Heat/Net Sync on the network, you can right-click and launch the Web Configuration Manager from there.
You only need to use the route add command if you choose not to use the Configuration Manager found on the CD that accompanied your Blue Heat/Net Sync unit.

From the command prompt of your computer, run: **route add A.B.C.0 mask 255.255.255.0 <current IP of your host machine>** Be sure to replace the **.D** from the Blue Heat/Net Sync's IP with a **0** (zero). Open your browser and put the Blue Heat/Net Sync's IP in the address bar (i.e**. A.B.C.D**) This will open the WCM. Log in (default login is **wcm** and the default password is **password**) and assign the static IP or change the IP to 0.0.0.0 if you are using a DHCP assigned IP.

Set the IP Address Using the Serial Configuration Manager

Insert your CD into the computer and complete the following steps:

1. Once your CD has been inserted, the Driver/Software Installation menu should appear. If it doesn't, double-click on ctisetup.htm.

2. Click **View** in the Blue Heat/Net Sync Software section and then **Connect** in the Serial Configuration Manager section. This will launch HyperTerminal that comes with Windows XP.

3. Unplug the power to the Blue Heat/Net Sync and plug it back in. Light indicators 1 to 4 will blink sequentially. This sequential flashing will last for 30 seconds. **You must log in during this window.**

4. During this sequential flashing, type the word **password** into the HyperTerminal window. Be careful you do not miss the window of opportunity to enter the password.

5. You now have access to the Serial Configuration Manager (SCM). An **scm>** prompt is ready to accept commands. If you do not see this prompt, unplug the power and repeat the steps above.

If you wish to set a dynamic IP address enter the following:
net dhcp=yes
save
exit

If you wish to set a static IP address, enter the following, substituting **xxx.xxx.xxx.xxx** with the static IP you wish to assign:

```
net mip=xxx.xxx.xxx.xxx
save
exit
```

Close the HyperTerminal. You may now disconnect the DB-25 cable from your PC and connect it to any serial device

.

Blue Heat/Net Sync Configuration

The Blue Heat/Net Sync comprises several software components, each of which manages various functions of the Blue Heat/Net Sync. The following is a breakdown of these components.

- **Operating System Software**
  - Host Operating System Driver
  - Configuration Manager
  - Web browser (Host Operating System supplied)

- **Blue Heat/Net Sync Software (Firmware)**
  - Embedded Operating System (uClinux)
    - Kernel
    - Drivers
      - Ethernet
      - Serial
      - Flash
    - Blue Heat/Net Sync Ethernet Protocol Converter application (Ctid)
    - Web server (Boa)
    - Web pages
    - Telnet services
  - PPP Client and PPP Server
  - Bootloader
  - Serial Configuration Manager (SCM) Application
  - Configuration Data Space (CDS)

The following section describes in brief what each main component controls.

Host Operating System Driver
The host operating system driver performs the translation from a standard serial COM port interface to the Blue Heat/Net Sync protocol (which is then delivered to the LAN as described above).

Configuration Manager
This software manages and configures the relationships between the Blue Heat/Net Sync serial ports and the COM port assignments of the Host Operating System.

Web Browser
The host operating system supplies a Web Browser to support the Web Configuration Manager (WCM) used to change the configuration settings of Blue Heat/Net Sync units.

Embedded Operating System
The embedded operating system is uClinux.

Bootloader
This code first starts up the embedded processor of the Blue Heat/Net Sync from a power-up or software initiated reboot. It then obtains the embedded operating system image (file) from one of several locations and runs the operating system.

Serial Configuration Manager (SCM) Application
This application is used to change the configuration settings of Blue Heat/Net Sync units by connecting to a serial port on the Blue Heat/Net Sync from a terminal (or terminal emulation program on a PC).

Configuration Data Space (CDS)
This is the area, in non-volatile (flash) memory, which stores the configuration parameters.

CDS (Configuration Data Space)

Description

The Blue Heat/Net Sync has a number of configuration parameters which are stored in a **non-volatile** (flash memory) area. (See appendix for list of parameters).

The CDS area is stored **redundantly** in the flash memory along with a **CRC**-style checksum to ensure data integrity.

Access to CDS Parameters

The parameters stored in the CDS can be changed through the use of the following configuration tools:
SCM Serial Configuration Manager
WCM Web Configuration Manager

These three methods allow the user to change configuration parameters by the method that is most convenient. In some cases several methods will be employed during different stages of the setup of the Blue Heat/Net Sync. For example:

The SCM may be employed in the beginning when the unit is not connected to a network and various networking parameters need to be set up prior to connection to a network.

WCM may be employed after the unit is connected to a network, possibly to modify other settings related to serial ports, bootup settings or others.

More information about the operation of the SCM Command Reference and WCM (Web Configuration Manager) follows.

NOTE: When CDS parameters are changed via the SCM or WCM some settings will not take effect until the Blue Heat/Net Sync is rebooted.

SCM (Serial Configuration Manager)

Description

The Serial Configuration Manager is one of the applications you can use to access the Configuration Data Space (CDS) settings of the Blue Heat/Net Sync. Since the CDS stores the default serial port settings, it is important that the line mode is configured prior to first use. Accessing the ports will not be possible otherwise.

Getting Access to the SCM

To access the SCM, simply connect a serial port terminal device (or a PC running a terminal emulator program) to any of the serial ports on the Blue Heat/Net Sync and enter a correct **Password**. A command prompt is then sent to the terminal and CDS parameters can be changed using a command line style of entry.

Blue Heat/Net Sync has **configurable line interfaces.** Certain settings can affect access to the SCM. The ports are scanned as follows:
The default line mode setting of **all** ports is **Undefined**. Under these conditions, the first two ports are set to RS-232 mode during port scanning. Access to the SCM is available through these ports only (you should set all ports to a known state prior to use).
When a port is set to something other than **Undefined**, any port with a setting of RS-232 or RS-485 Full Duplex will be scanned. Otherwise, scanning is not performed and access to SCM is not available.

> NOTE: To access the Blue Heat/Net Sync via the SCM your serial line interface settings must be at the default values of 9600 baud, 8 data bits, no parity and 1 stop bit (**9600**, **8**, **n**, **1**). No flow control is recommended.

In a situation where port scanning is not performed, you can still access the SCM using the push button reset on the back of the unit. Follow the instructions in the section Activating the Special Operations Mode and Default Settings to access the SCM in this situation

See the section which describes how the Blue Heat/Net Sync boots for a complete description of the **Bootup** process of the Blue Heat/Net Sync and how to access the SCM.

SCM Command Reference

SCM commands are entered as strings of ASCII characters with options separated by whitespace characters. The entire command line is terminated by a CR character or CR/LF character pair.

Command lines can be entered manually (via a terminal or a PC with terminal emulator program) or sent from an application program.

If an SCM command is entered with no options specified, the command shows the syntax of its options and the current setting of those options.

Brief Command List

- boot — Bootup settings
- cfg — SCM operational settings
- exit — Exits the SCM application (and optionally reboots the Blue Heat/Net Sync)
- help — Brief list of available commands and their syntax
- info — Blue Heat/Net Sync general information and flash verification

- net — Network settings
- save — Save setting changes to non-volatile flash storage
- update — Download a new operating system via TFTP and flash, (uClinux) and loader/SCM image.

Command Details

boot

Syntax: **boot [mode=] [file=] [delay=]**

Description: This command establishes the Blue Heat/Net Sync boot-up mode. For a detailed description of the boot-up process of the Blue Heat/Net Sync, see How the Blue Heat/Net Sync Boots Up in the Appendix.

Options: **mode=**
A comma-separated list of the following sub-options. Each sub-option is preceded by either a + or a – to indicate if the sub-option is enabled or disabled.
±flash Enables or disables the ability to boot from the flash memory.
±bootp Enables or disables the ability to obtain the boot-up information from a Server.
±tftp Enables or disables the ability to download and boot from a file located on a Server.

file=
This option specifies the default file name used for the boot-up (if TFTP boot is enabled) and also the default file name when using the **flos** command.
This can be any sequence of characters up to 128 characters in length. (The default is **BHNuClinux_vvv.gz**, where vvv is the current version number of the "Operating System image").

delay=
This sets the time duration for accessing the SCM application. It can be set from 2 to 30 seconds, the **default is 30**. (See the section How the Blue Heat/Net Sync Boots Up for more information).

cfg

Syntax: **cfg [port=] [timeout=] [password=] [prompt=] [file=]**

Description: Establishes the settings used by the SCM application to modify its behavior.

Options: **port=**
Specifies the port number to scan for a password to gain entry in the SCM.
N = Scan just port N (N=1 to the number of ports on the unit).
255 = Scan all ports on the unit (default unless unit has programmable line interfaces).

timeout=
Specifies the time duration allowed for a TCM (via telnet) session to be idle (no activity) before the session is terminated.
0 to 1092 minutes
(default = 5)
Note: A setting of zero allows infinite timeout.

NOTE: The TCM function is currently not available with this product.

password=
This sets the password phrase, which is used to gain access to the SCM and WCM modes of configuring the Blue Heat/Net. The default is "password".

prompt=
This setting controls whether a password prompt (and other password entry status information) is presented to the terminal. This prompting is helpful for new users of the product but may present a problem when other devices are connected to the serial port.
yes enables the password prompting (default)
no disables the password prompting

file=
This sets the file name used as a default when using the **flldr** command.
It can be any sequence of characters up to 128 characters in length. (The default is "BHNloader_vvv.gz", where vvv is the current version number of the "Loader").

exit

Syntax: **exit [-nosave] [-no_reset][-login]**

Description: This command is to exit the SCM and reboot the Blue Heat/Net Sync. If CDS changes have been made a warning message is issued and the SCM will not exit.

Options: **-nosave**
Exit without saving changes (abandon changes).

-no_reset
Exit SCM without rebooting, maintaining the changes to settings for this session only. (Booting is continued after the SCM is exited.)

-login
Exit without saving changes, and restart the SCM login process.

help

Syntax: **help**

Description: Displays a brief list of all the commands.

Options: There are no options for the help command. Please note that specific help for the options of each command can be obtained by entering any command with a single "?" argument. An example would be **net ?**

info

Syntax: **info [-v]**

Description: This command is used to show basic information about the Blue Heat/Net Sync unit, like Serial Number and Version Numbers, and performs a confidence (CRC and Decompression verification) test of the contents of the flash memory.

Options: **-v**

This option disables the confidence tests.

net

Syntax: **net** **[network= | net=]**
[my_ip= | mip=]
[server_ip= | sip=]
[gateway_ip= | gip=]
[subnetmask= | snm=]
[broadcast_ip= | bcip=]
[dns_ip=]
[domain=]
[host name=1 host=]
[tcp=]
[mac=]
[dhcp=]

Description: Establishes the network settings.

Options: **network= | net=**
Sets the "network" portion of the IP address into **my_ip**, **server_ip** and **gateway_ip**. The address entered is masked by the subnet mask setting before being applied. This command is a shortcut for quickly setting all the IP addresses of the unit. See note below.

my_ip= | mip=
This sets the IP address of the Blue Heat/Net Sync unit (default is 192.168.42.1). See note below.

server_ip= | sip=
This sets the Server IP address. This address determines the address of the Server to use when the **Bootp** and **tftp** mode is enabled (see **boot** command), and also as the default Server address to use for the **update** commands (default is **0.0.0.0**). See note below.

gateway_ip= | gip=
This sets the Gateway IP address. This address is used when the **Bootp** mode is enabled, default is **0.0.0.0**. See note below.

subnetmask= | snm=
This sets the Subnet mask IP address. (The default is **255.255.255.0**) See note 1.

broadcast_ip= | bcip=
This sets the Broadcast IP address. This is used when the **Bootp** mode is enabled. (The default **255.255.255.255**). See note below.

dns_ip=
This sets the IP of Domain Name Server. (The default is 0.0.0.0). This must be set to update the Blue Heat/Net Sync firmware automatically from Connect Tech's anonymous ftp server.

domain=
This sets the Domain name of the unit. (The default is **blueheat.net**)

Host name=1 host =

This sets the Host name of the Blue Heat/Net Sync unit. (The default is **BHNssssssss**, where "ssssssss" is the serial number of the unit).

tcp=
This sets the base TCP port number used for Host TCP/IP and UDP/IP communications. The default is 49152 (0xC000)

mac=
This displays the MAC address of the unit. (The default is **00:0C:8B:SS:SS:SS**, where SS:SS:SS is the hex value of the serial number of the unit). Note: The MAC address **cannot** be changed, it can only be displayed.

dhcp=
This enables or disables DHCP support.
yes enables
no disables (default)

NOTES:

All IP addresses are entered in common IP address notation: **ddd.ddd.ddd.ddd** where **ddd** is a decimal number from 0 to 255.

IP address "**my_ip, server_ip, gateway_ip** and **dns_ip**" can be entered right justified, meaning that the address entered will be applied to the specified address starting from the least significant digit, masked by the subnet mask. For example:
If the subnet mask is set to **255.255.255.0**, and the following command is entered:
net net=12.23.34.00 mip=45 sip=56 gip=67 dns_ip=89
The following IP addresses result:
the Blue Heat/Net Sync unit will be 12.23.34.45
the Server will be 12.23.34.56
the Gateway will be 12.23.34.67
and the DNS IP will be 12.23.34.89

save

Syntax: **save**

Description: This command saves the setting changes into the CDS in the non-volatile (flash) memory.

Options: (none)

update

Syntax: **update <-os | -loader | -jffs> [server_ip= | sip=] [file=]**

Description: Download and store (in flash memory) a new uClinux Operating System image or a new Loader/SCM image. The download is conducted by a TFTP download from a Server. After download the image file is checked as being a valid gzip file (file is decompressed to validate its contents), and then the file is stored in

flash memory. The **OS** file is stored in flash in its compressed form, but the **Loader** is stored uncompressed.

Options: **-os | -loader | -jffs**
Use **-os** to update the uClinux OS.
Use **–loader** to update the loader/SCM.
Use **–jffs** to update the JFFS system (Journaling Flash File System).

server_ip= | sip=
Specify the Server IP address from which the file is to be downloaded.

file=
Specify the file name to download. If the **–jffs** option is chosen, then the **file=** option is mandatory.

NOTE: After downloading, the image is checked to ensure the file is correctly formatted. If the file is bad the command exits. The version is checked against your current version. If they match, you will be prompted to choose if you wish to program the flash. Enter "y" to continue. If the version is different, the new version needs to be saved with the **save** command when the update is finished.
When the JFFS is updated, all previous contents are destroyed. Only use this option when updating to a Blue Heat/Net Sync that supports Personality settings.

WCM (Web Configuration Manager)

Signing In to the Web Configuration Manager

You will need to know the IP address of your Blue Heat/Net Sync unit before you use the Web Configuration Manager. Use the Serial Configuration Manager to assign the Blue Heat/Net Sync a valid IP address, or tell the Blue Heat/Net Sync to use DHCP to automatically obtain an IP address. Please refer to the SCM Command Reference documentation for information on how to do this.
Once you know your IP address, open your web browser and go to: http://_your_ip_address_/ or http://www.hostname.com/

You will arrive at the Blue Heat/Net Sync Web Configuration Manager Sign In page. The default username is **wcm**. Leave this name as is. The default password is **password**. Use this username/password combination and click the **Sign In** button to log on to the Web Configuration Manager.

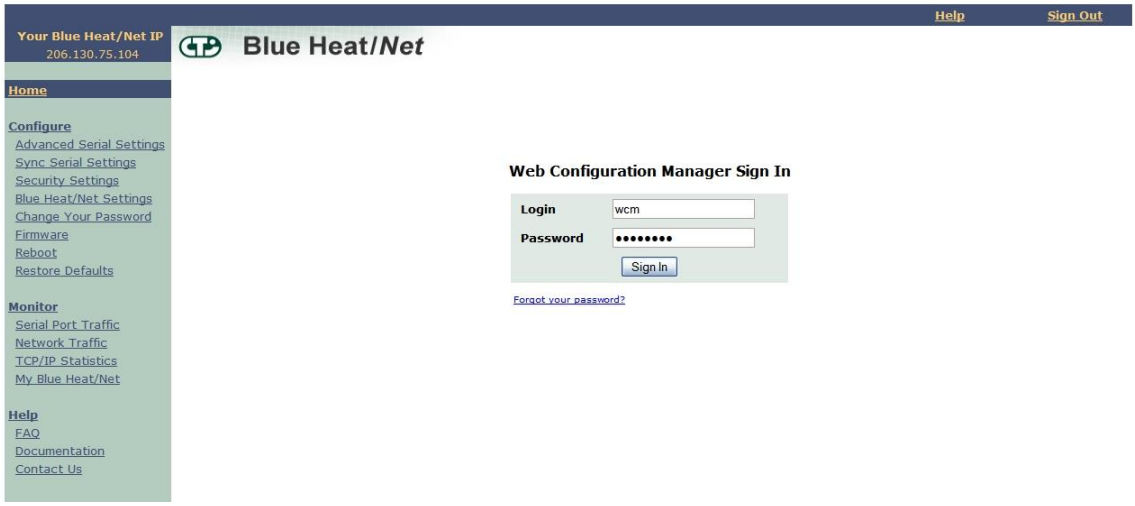

Figure 13: Web Configuration Manager Sign In

Once you have signed in, you should immediately change the default password.

At this point you should be directed to the Web Configuration Manager homepage.

To sign out of the Web Configuration Manager, just click on the Sign Out link on the upper right hand side of the Web Configuration Manager.

Signed In: wcm@206.130.75.121 Help Sign Out

Your Blue Heat/Net IP
206.130.75.104

Blue Heat/*Net*

Save To Flash

Home

Configure
- Advanced Serial Settings
- Sync Serial Settings
- Security Settings
- Blue Heat/Net Settings
- Change Your Password
- Firmware
- Reboot
- Restore Defaults

Monitor
- Serial Port Traffic
- Network Traffic
- TCP/IP Statistics
- My Blue Heat/Net

Help
- FAQ
- Documentation
- Contact Us

This section allows you to configure Blue Heat/Net Sync system properties. The help section describes each configuration parameter in detail.

Port 1 | Port 2 | Port 3 | Port 4

Clock Tree Settings

Tx Mode	Async	Rx Mode	Async
Tx Clk Tree Level A	None	Rx Clk Tree Level A	BRG 0
Tx Clk Tree Level B	BRG0	Rx Clk Tree Level B	BRG0
Tx Clk Tree Level C	CTR0	Rx Clk Tree Level C	CTR0
Tx Clk Tree Level D	Ref	Rx Clk Tree Level D	Ref
TxC Pin Mode	Input	RxC Pin Mode	Input

Timing Control

Tx Ref Freq	18432000	Rx Ref Freq	18432000
Tx BPS Error (PPM)	500	Rx BPS Error (PPM)	10000
Tx BPS	9600	Rx BPS	9600
Tx BPS Frac	0	Rx BPS Frac	0
Tx Async Div	16	Rx Async Div	16
Tx DPLL Div	8	Rx DPLL Div	8
Tx CTR Div	4	Rx CTR Div	4

Interface & Encoding

Line Mode	V28 (RS232)	Line Termination	○ On ⦿ Off
Tx Encoding	NRZ	Rx Encoding	NRZ

Tx PreAmble & Idle Pattern

Preamble	Disable	Length	8
Idle	Default		

Duplex Settings

Duplex Mode	Full

Sync chars

Tx 0	00	Rx 0	00
Tx 1	00	Rx 1	00
Length	= Data Bits	Length	= Data Bits
Strip Sync	○ Yes ⦿ No		

Data Bits & Parity

Tx Data bits	8	Rx Data bits	8
Tx Parity	None	Rx Parity	None

CRC

Tx Type	None	Rx Type	None
Tx Start	Start with all zeros	Rx Start	Start with all zeros
Tx Mode	Tx Underrun		
EOF/M Char	00		

Trigger & Gating

Tx Trig/Gate	Disable	Rx Gated	Disable

Async Settings

Software Flow Control	⦿ On ○ Off	Xon Char 11	Xoff Char 13
Hardware Flow Control Tx CTS	○ On ⦿ Off	Hardware Flow Control Rx RTS	○ On ⦿ Off ○ Toggle
Hardware Flow Control Tx DSR	○ On ⦿ Off	Hardware Flow Control Rx DTR	○ On ⦿ Off

Special Modes

Error	○ On ⦿ Off	Char 01
Break	○ On ⦿ Off	Char 00
Event	○ On ⦿ Off	Char 00
Escape	○ On ⦿ Off	Char 00

Fifos

Tx Enable	⦿ On ○ Off
Tx Load	80
Rx Threshold	01

Submit Restore

Figure 14: Blue Heat/Net Sync Settings

Configure Advanced Serial Settings

The Web Configuration Manager also allows you to configure more advanced serial port properties. These advanced properties will allow you to configure the XOn Character, XOff Character, Break Character, Escape Character, Error Character and Event Character, and Transmit Load Setting for each serial port.

Further, you will be able to specify whether you want to enable Null Stripping or RTS Toggle for a particular port as well as the option to enable or disable the Break, Event and Error characters.

By default, all advanced serial properties are disabled. You should only use these advanced properties if you require them.

You are required to use the ASCII representation of characters using the respective hexidecimal values. For example, if you wanted your XOn character to be capital 'A', you would specify a hex value of 41.

We have provided you with an ASCII table on the Advanced Serial Port Properties page for your convenience. Click on the **ASCII Table** link, and an ASCII table will open in a new window.

Each serial port parameter has been abbreviated due to space constraints. We have provided another link which describes the abbreviated parameter descriptions. Click on the **Parameter Descriptions** link, and a new window will open which contains a description of each parameter.

Configure Blue Heat/Net Sync Settings

This section provides various Blue Heat/Net Sync Configuration options, and shows you the saved versus current settings. The details for each configuration option are provided below:

- **Flash Enabled**: This option enables or disables the ability of the Blue Heat/Net Sync to boot-up from flash memory.
- **Bootp Enabled**: This option enables or disables the Blue Heat/Net's ability to obtain boot-up information from the server (see "Server IP Address" below).
- **TFTP Enabled**: This option enables or disables the ability to download and boot from a file located on a server (see "Server IP Address" below).
- **DHCP Enabled**: This option enables or disables the use of DHCP. If DHCP is enabled, the Blue Heat/Net Sync will attempt to automatically obtain an IP address. If DHCP is disabled, you must manually specify an IP address for the Blue Heat/Net.
- **Configuration Port**: This option sets the port to scan for the password to gain entry into the Serial Configuration Manager. You can specify a particular port, or specify the **Scan All Ports** option. In this case the Blue Heat/Net Sync will scan all ports for the password when the Blue Heat/Net Sync is booting. The default setting is **Scan All Ports**.
- **Session Timeout**: This option specifies the time allowed between web page navigation. The default session timeout is 5 minutes. This means if the Web Configuration Manager has not received any requests for more than 5 minutes, you will be automatically logged out. You can set the timeout from 1 minute to 2 hours, or disable the session timeout all together by selecting the **Disable Timeout** option.
- **Boot Delay**: This option specifies time allowed for gaining access to the Serial Configuration Manager while the Blue Heat/Net Sync is booting. The time ranges from 2 seconds to 30 seconds. The default setting is 30 seconds.

- **Server IP Address**: This option sets the server IP address. This is used as the Server address to use when bootp mode or TFTP mode is enabled. The default Server IP address is 0.0.0.0
- **Blue Heat/Net Sync IP Address**: This option sets the IP address of your Blue Heat/Net. The default IP address for your Blue Heat/Net Sync is 192.168.42.1
- **Domain Name:** This option sets the domain name of your Blue Heat/Net. The default domain name is **blueheat.net**.
- **Host Name:** This option sets the hostname of your Blue Heat/Net. The default hostname is BHNssssss, where ssssss is your Blue Heat/Net Sync serial number.
- **Gateway IP Address:** This option sets the Gateway IP address for your Blue Heat/Net. The default Gateway IP address is 0.0.0.0
- **Broadcast IP Address:** This option sets the Broadcast IP address. The default Broadcast IP address is 255.255.255.255.
- **Subnet Mask:** This option sets the Subnet mask IP address. The default Subnet mask IP address is 255.255.255.0.
- **Bootfile Name:** This option specifies the default file name which will be used for Blue Heat/Net Sync boot-up, *if TFTP is enabled*. If TFTP is enabled, the Blue Heat/Net Sync will attempt to download the bootfile you specify from a Server IP address you specify (see "Server IP Address" above). The bootfile name should reference a valid uClinux kernel image. If TFTP is enabled, the Blue Heat/Net Sync unit will attempt to download this image, and will also attempt to decompress the image and run it.
- **TCP Port:** This option allows you to change the starting local TCP port that is used to service clients connecting to the Blue Heat/Net Sync unit. The default TCP port is 49152. When altering the TCP port on the Blue Heat/Net Sync unit, you must also alter it on the user's side.
- **Domain Server IP Address:** This option sets the Domain Name Server IP address. The default DNS IP address is 0.0.0.0.

After you've made any necessary configuration changes, click the **Submit** button at the bottom of the page. A confirmation page will show up confirming the Blue Heat/Net Sync changes.

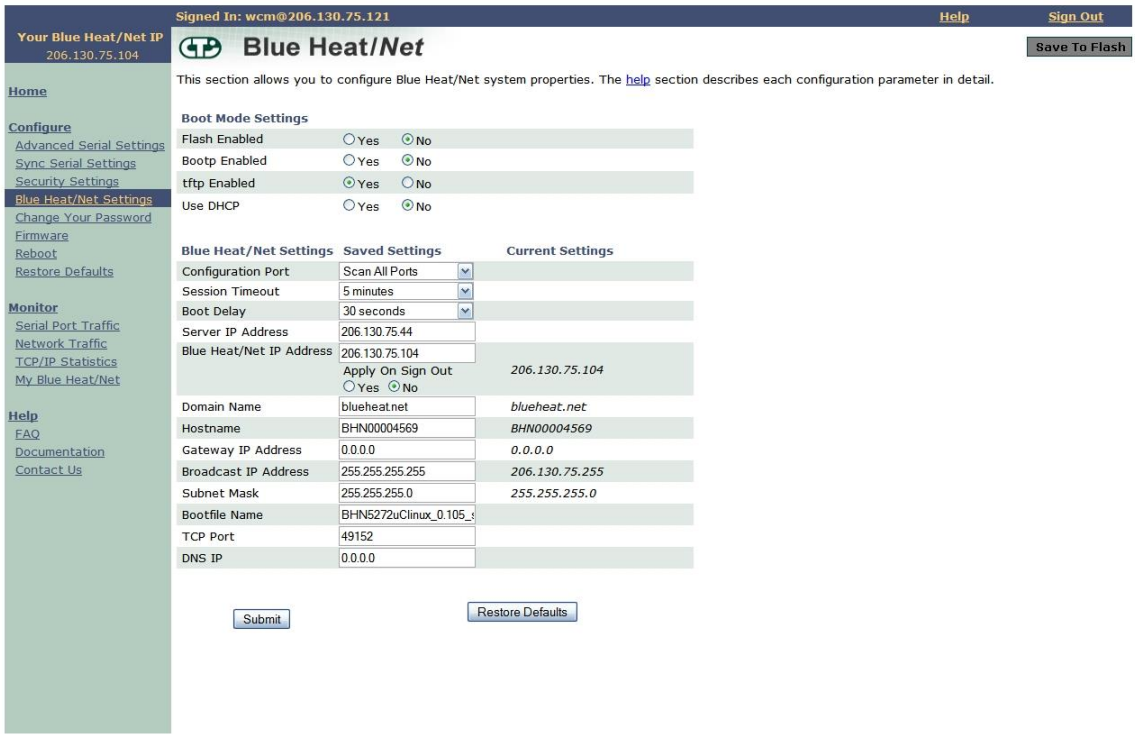

Figure 15: Configuring Blue Heat/Net Sync Settings

Configure Firmware

This section enables you to download new firmware to the Blue Heat/Net Sync unit. Select a download source and a specific firmware file path, if applicable, and then submit the download request. This section also provides a link to reboot your Blue Heat/Net. This is standard procedure after installing new firmware.

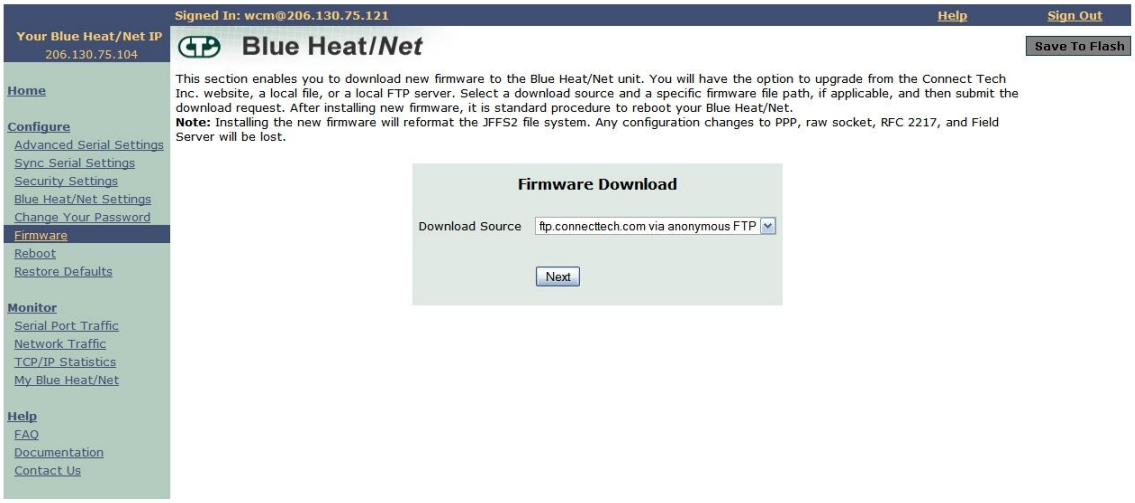

Figure 16: Firmware Upgrades/Downloads

Restore Defaults

The Restore Defaults page enables you to quickly reset all or some of the default basic, advanced, security, Blue Heat/Net Sync or system settings of your Blue Heat/Net Sync.

NOTE: This function is not currently operational.

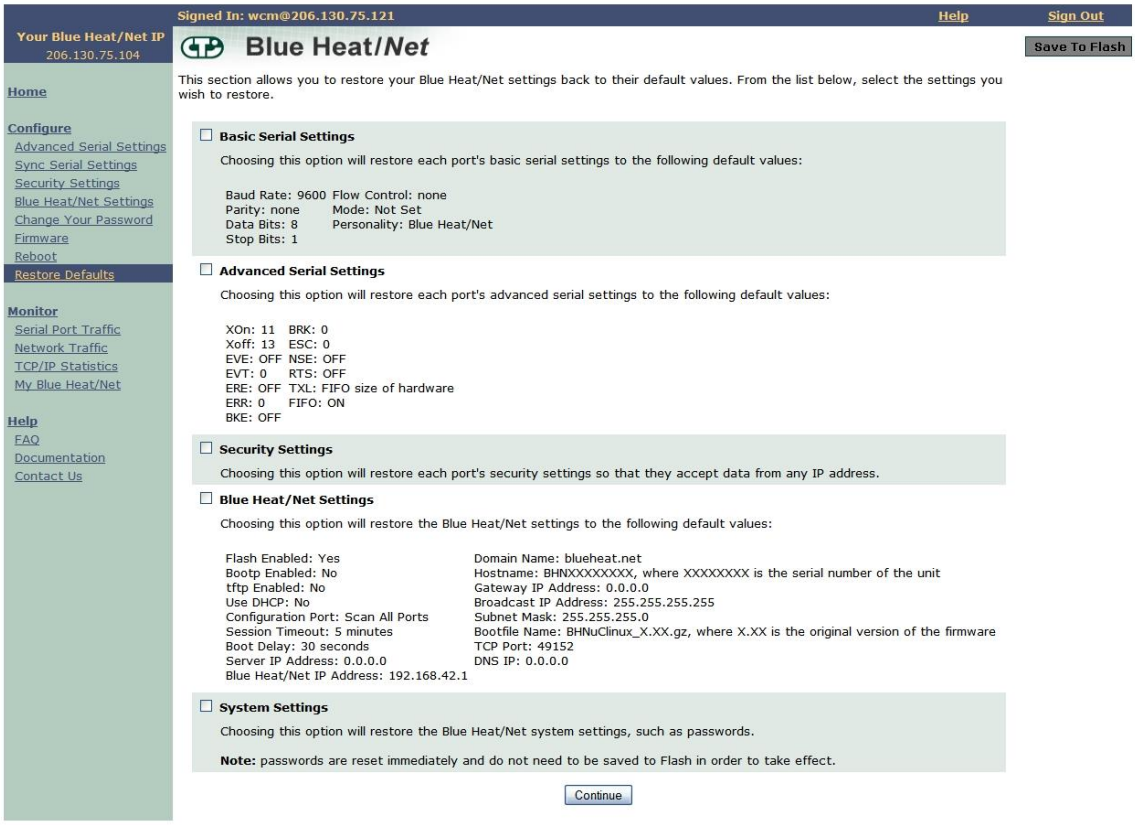

Figure 17: Restore Default Settings

Saving To Flash

When you make configuration changes, the changes are stored temporarily in memory. If you reboot your Blue Heat/Net Sync at this point, any configuration changes you made will be lost. To permanently save your changes, you need to save them to flash. In order to do this, click the **Save to Flash** button on the upper right-hand side of the Web Configuration Manager page.

If there are changes that need to be saved, the **Save To Flash** button will be yellow. Click the **Submit** button to permanently save any configuration changes to the flash memory so they will be present when you reboot your Blue Heat/Net.

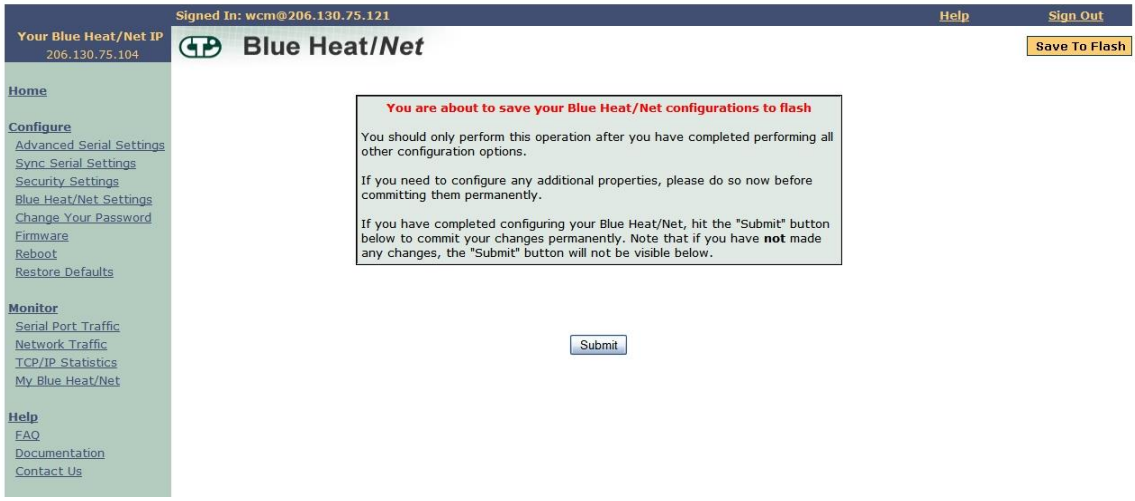

Figure 18: Saving To Flash

If you haven't made any configuration changes, the **Save To Flash** button will remain grey.

Monitoring Your Blue Heat/Net

The Blue Heat/Net Sync WCM lets you monitor serial port activity, network traffic and TCP/IP statistics as well as providing hardware and software details for your Blue Heat/Net Sync unit.

Monitor Serial Port Traffic

This page allows you to monitor your serial port traffic. For each Blue Heat/Net Sync port, you can view the number of bytes transmitted, received, whether the port is using flow control, if there are any Parity/Framing/Overrun errors, and which remote IP address is connected to your serial port.
If ports are active (open) they are shown in green, while inactive (closed) ports are shown in grey.

NOTE: This function is not currently operational.

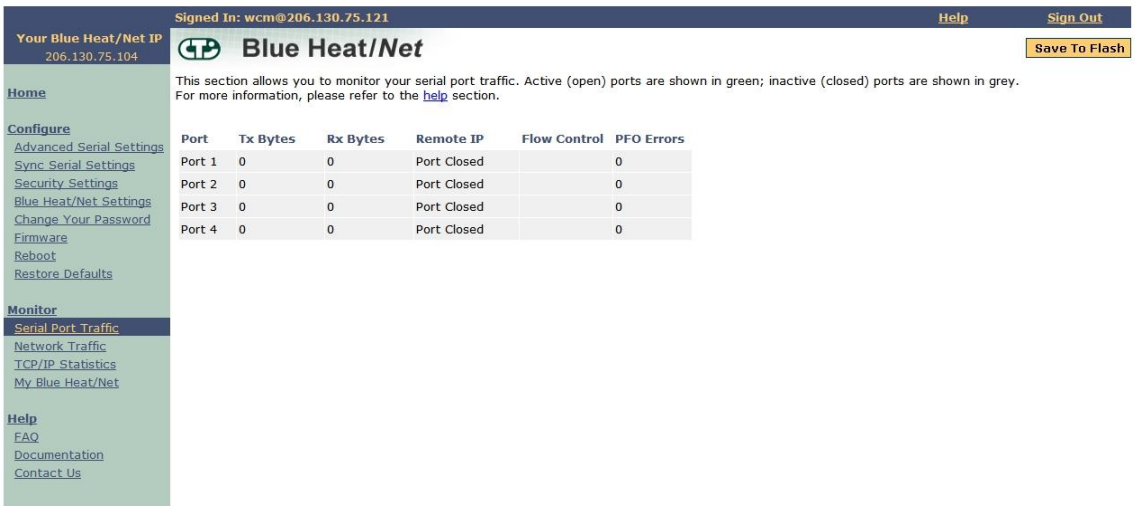

Figure 19: Monitoring Serial Port Activity

Monitor Network Traffic

This page allows you to view all network activity on your Blue Heat/Net. For each active network connection, you can view the local IP address and port, the remote IP address and port, the status of the connection, the protocol being used, as well as the number of queued transmit and receive bytes.

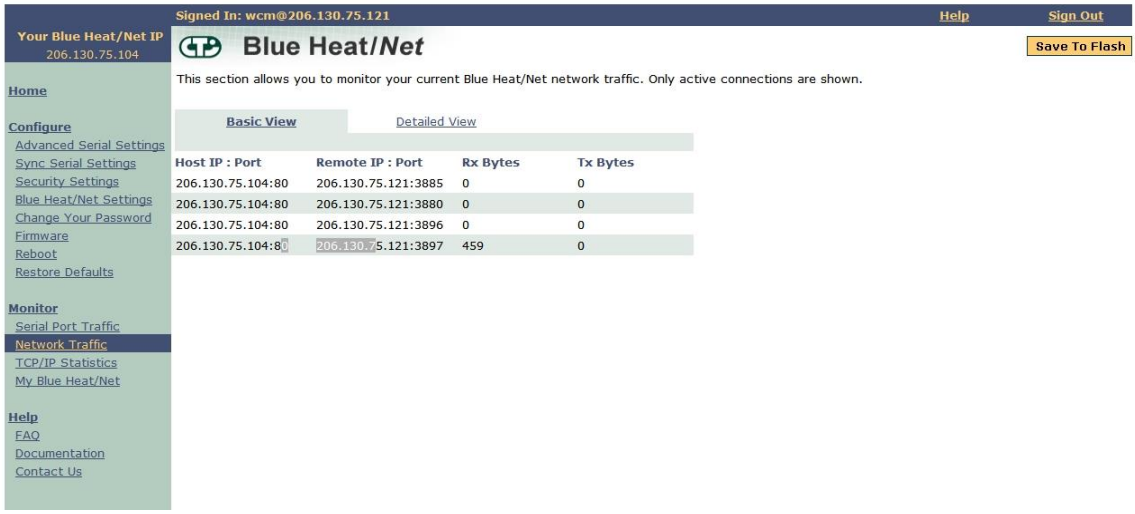

Figure 20: Monitoring Network Traffic

Monitor TCP/IP Statistics

This page allows you to view TCP, IP, UDP and ICMP statistics for your Blue Heat/Net Sync. This page also has a link which describes each of the network statistic parameters. Simply click on the **Parameter Descriptions** link, and a new window will open up which contains a description of each parameter.

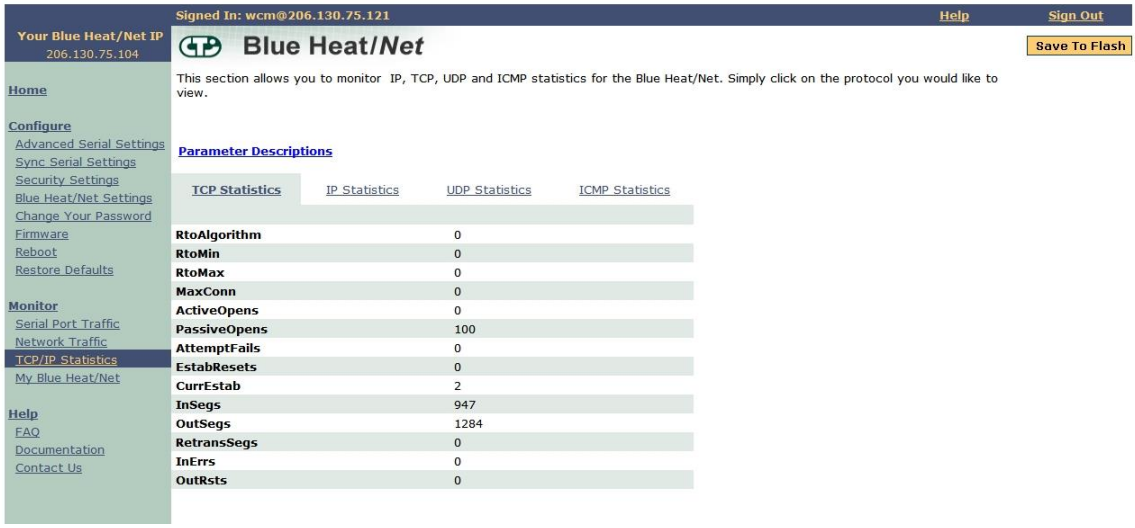

Figure 21: Monitoring TCP/IP Statistics

My Blue Heat/Net Sync

This page provides you with three display options: Hardware, Software and Performance.

Use this link to find information such as device serial number, runtime software versions and firmware versions.

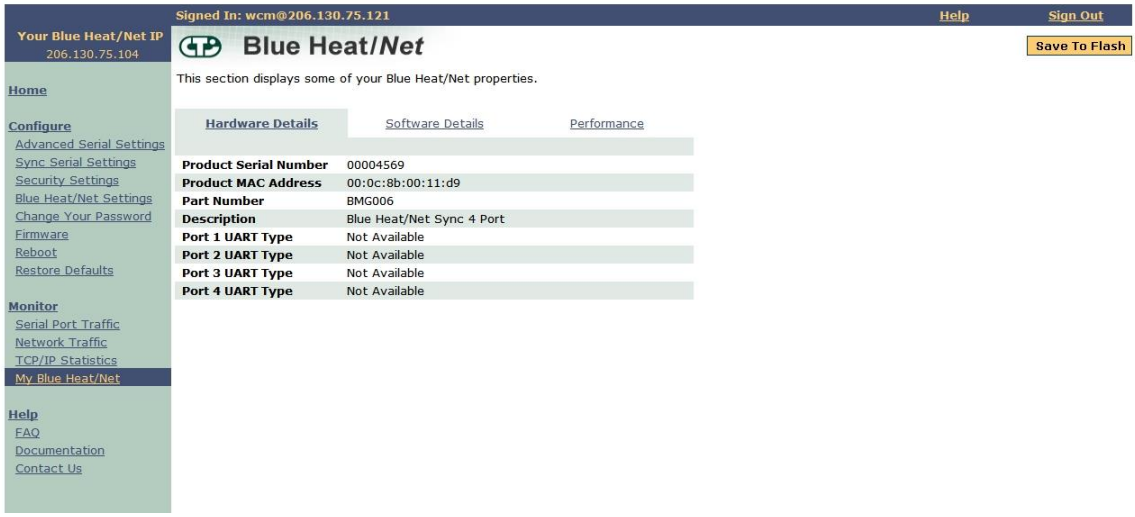

Figure 22: My Blue Heat/Net Sync Hardware Details

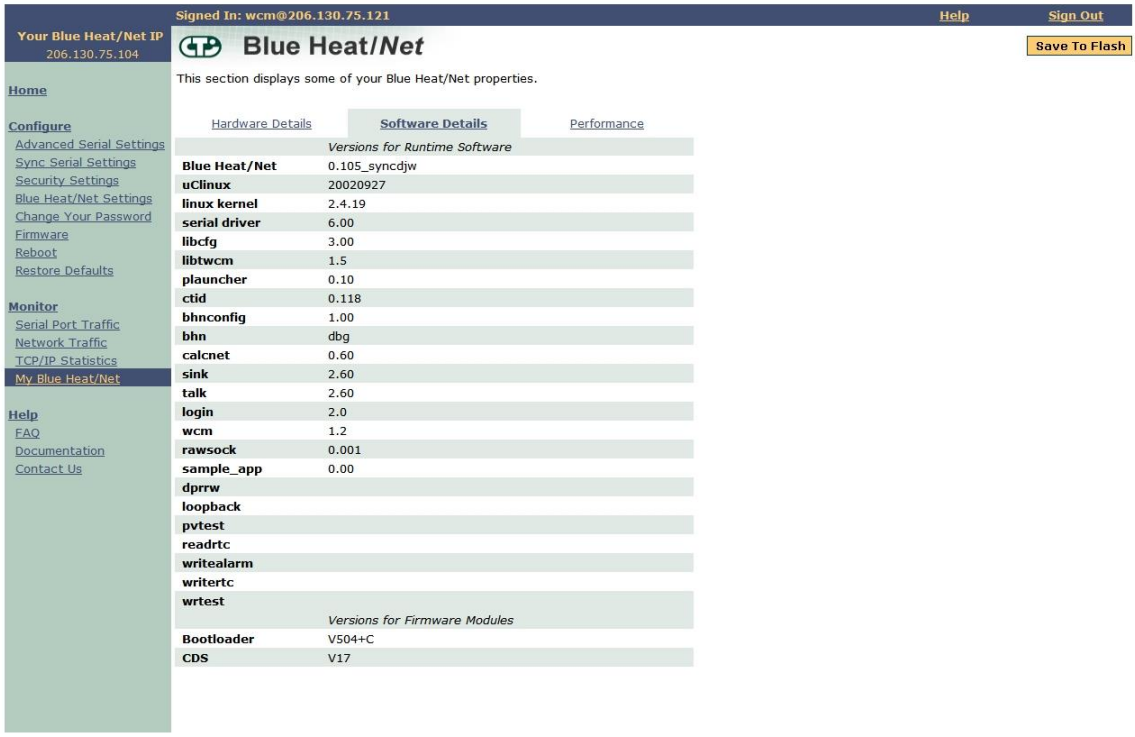

Figure 23: My Blue Heat/Net Sync Software Details

Software Installation for Windows

The Blue Heat/Net Sync is designed for easy installation and set up.
This section deals with installing and using the Blue Heat/Net Sync software to communicate with your Blue Heat/Net Sync.

To do so, you will use the CD included with the Blue Heat/Net Sync to install the Configuration Manager on your computer. The Blue Heat/Net Sync Configuration Manager will allow you install the Blue Heat/Net Sync on your local system, and map and configure the Blue Heat/Net Sync's communication ports.

NOTE: Software support for Windows is still in development

Installing the Blue Heat/Net Sync Configuration Manager

The Blue Heat/Net Sync Configuration Manager is a tool to control your Blue Heat/Net Sync from your local Windows operating system. To install the Blue Heat/Net Sync Configuration Manager on your computer, insert the CD provided with your Blue Heat/Net Sync into the disk drive.

You should see this window in your browser:

Figure 24: Blue Heat/Net Sync Driver/Software Installation CD

NOTE: Windows XP SP2 users should read the SP2 info prior to installing the Configuration Manager

Select View from the Blue Heat/Net Sync software. It will bring you to the following screen. Click Install to begin the Configuration Manager installation. Ensure you choose Open or Run when the File Download window appears and asks if you'd like to open the file or save it to your computer.

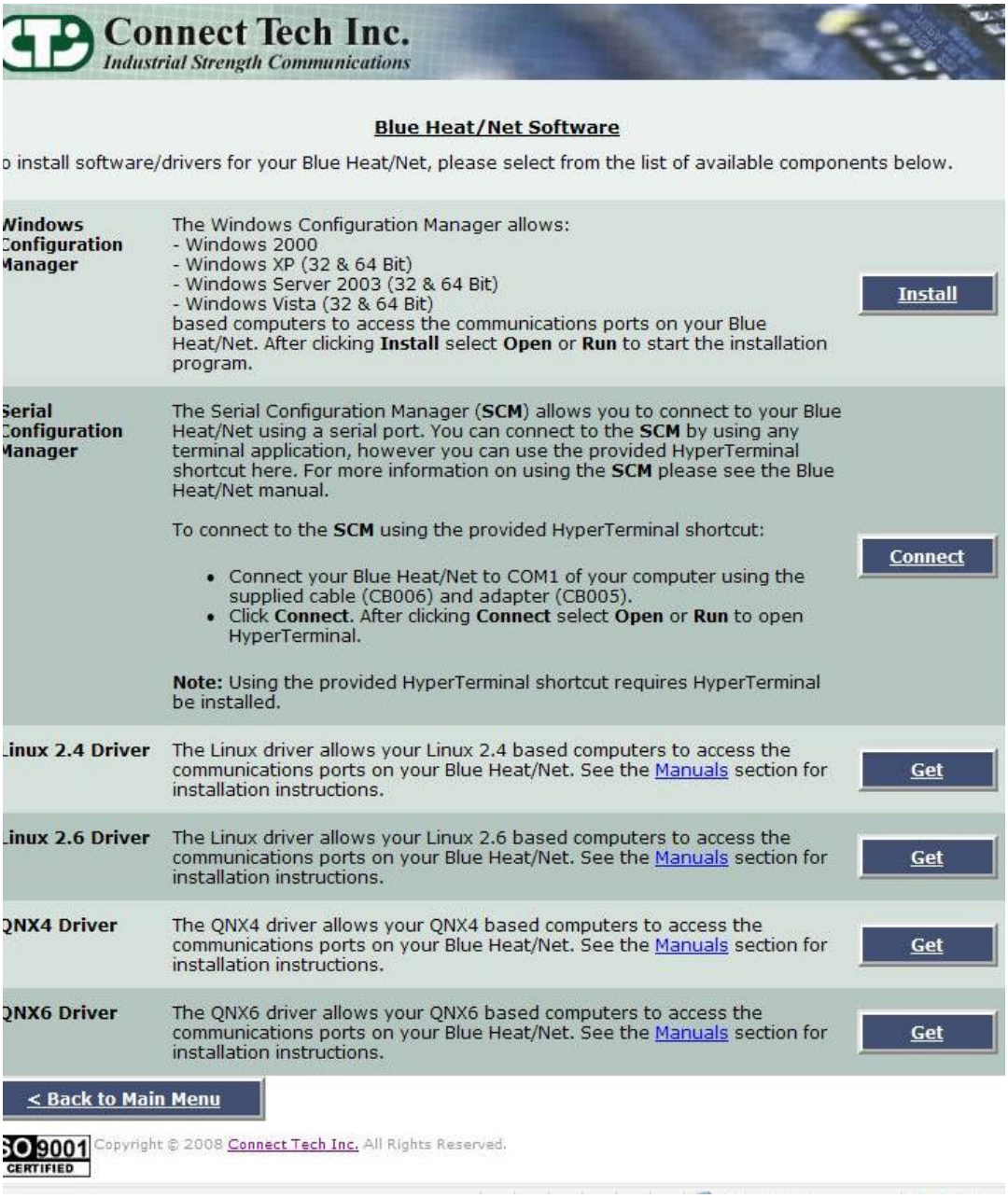

Figure 25: Blue Heat/Net Sync Software Installation Screen

The Blue Heat/Net Configuration Manager Setup Wizard will begin. Click **Next** to start.

Next you will have the option to launch the configuration manager after installation.

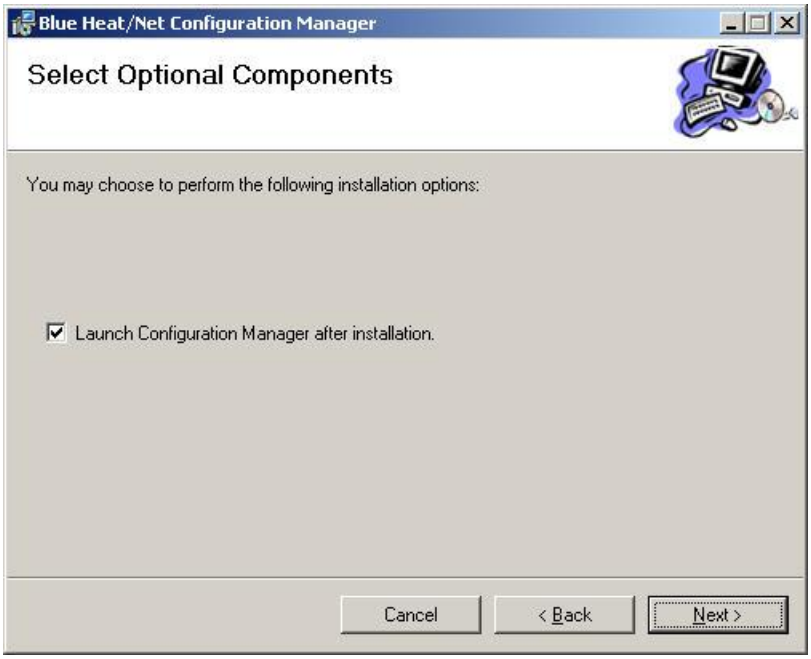

The installer will install the Configuration Manager into **C:\Program Files\CTI\Blue Heat Net.** If you'd prefer an alternate location, specify in the space provided, or click Browse to locate the new folder. Click **Next**.

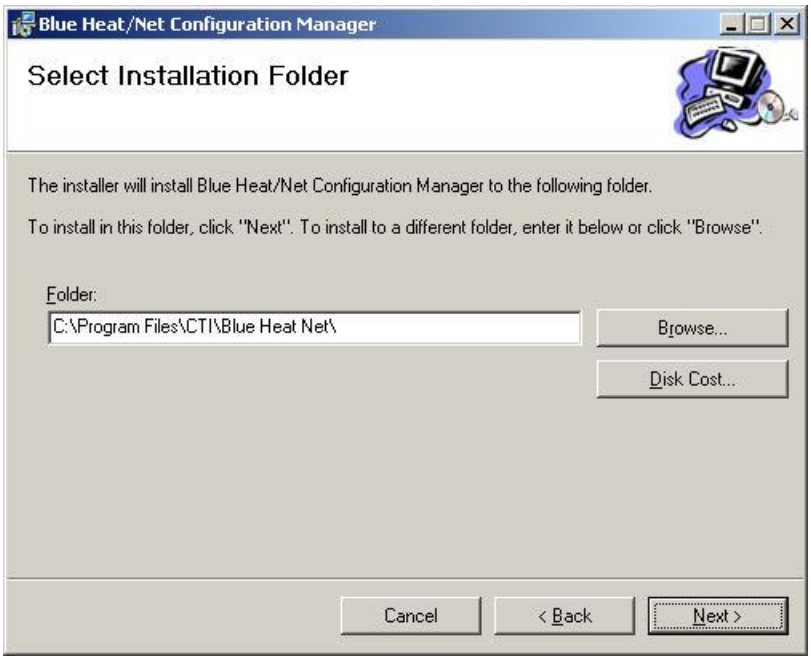

You will then be prompted to confirm you wish to install the Configuration Manager. Select **Next** to begin.

When the Installation Complete window appears, the Configuration Manager has been successfully installed. Click **Close** to exit the installation wizard.

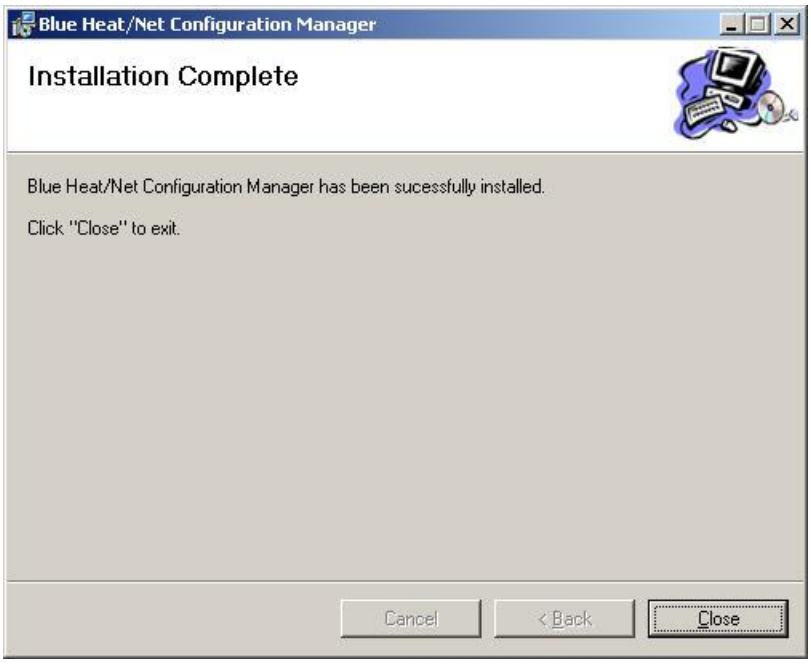

Running the Configuration Manager

If you chose the option to launch the Blue Heat/Net Sync Configuration Manager after installation, the main Configuration Manager window should now be open on your screen. If you did not, you can launch it from the CTI default folder or whichever folder you chose during the installation.

Figure 26: My Blue Heat/Net Sync Places Screen

Configure Default Blue Heat/Net Sync

You can choose this option when your Blue Heat/Net Sync still has a factory default IP address of 192.168.42.1. It will launch the Web Configuration Manager for this IP address, enabling you to configure your Blue Heat/Net Sync as outlined in the Web Configuration Manager.

Figure 27: Add or Auto Discover Blue Heat/Net Sync Menu Screen

Auto Discover Blue Heat/Net Sync

The auto discover will broadcast a message to all the Blue Heat/Net Sync devices on your network. Upon receiving the broadcast packet, the Blue Heat/Net Sync device will respond. Click the **Auto Discover** button to search for Blue Heat/Net. The searching domain can be changed by checking **Use Specific Broadcast IP** and entering an IP address domain in the IP address box. The broadcast packet will use the default UDP port 49152, but it can be changed in the Blue Heat/Net Sync configuration. The **Stop** button will end the search.

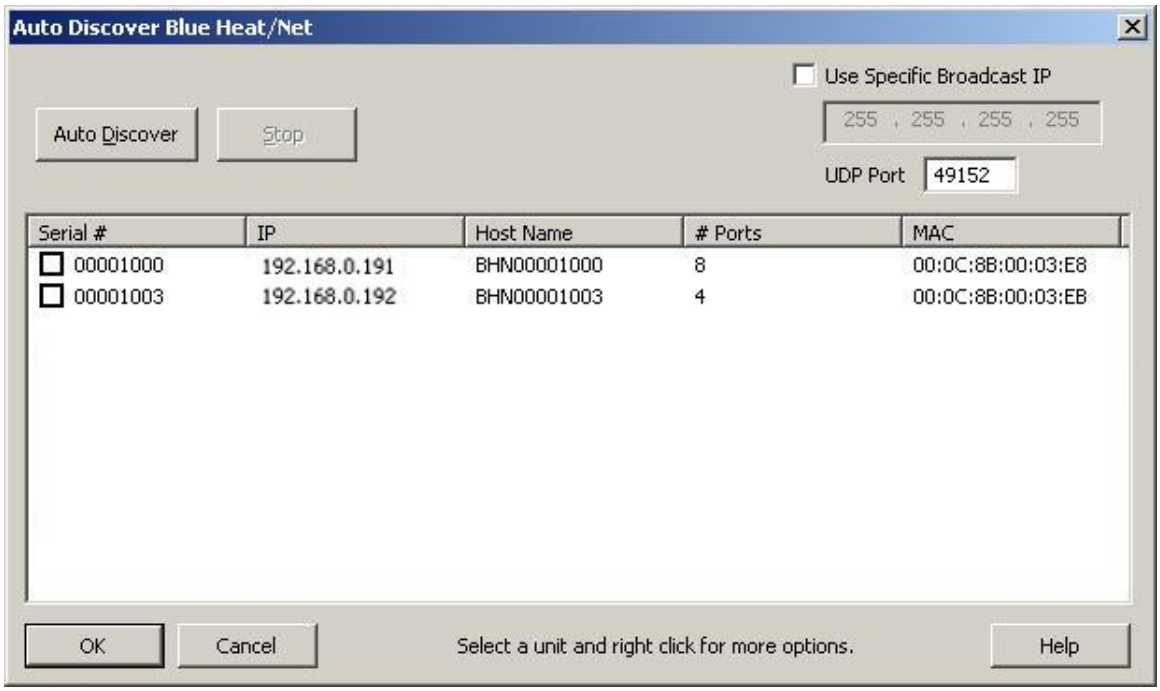

Figure 28: Auto Discover Blue Heat/Net Sync Screen

Auto Discover will list any Blue Heat/Net Sync on your network, along with Blue Heat/Net Sync's serial number, IP address, host name, number of available ports and the MAC address. To install a Blue Heat/Net Sync check the appropriate box under **Serial #** column and then click **OK**. Right click for more options, including the option to launch the Web Configuration Manager.

Firmware Upgrades

If you need to re-install your current firmware, it is located in the firmware directory of the CD you received with your Blue Heat/Net Sync.

Newer firmware versions are available from Connect Tech's website, http://www.connecttech.com/asp/Support/DownloadZone.asp. Choose Blue Heat/Net Sync product. Ensure the following parameters are set: **mip, sip, gip** and **dns_ip** using the SCM. To upgrade your Blue Heat/Net Sync firmware, you can use any of the following three methods, depending on your preference.

Upgrade using WCM (Web Configuration Manager)

The Web Configuration Manager is the easiest way to upgrade your firmware. Simply log onto the WCM as described in the WCM (Web Configuration Manager) section, and click on the Firmware link on the left menu. This will bring you to the Firmware page. You will have the option to upgrade from the remote CTI website, or to download the upgrade from a local FTP server.
If you choose to upgrade via a local FTP server, copy the firmware (*.tar) file to the anonymous directory of a local FTP server. If you do not have a local FTP server, contact your system administrator to set one up.

Upgrade using SCM (Serial Configuration Manager)

The SCM method of upgrading is used when the Blue Heat/Net Sync does not boot properly. You can reinstall your original firmware from the supplied CD, or you can download any newer versions that exist from the CTI website in the http://www.connecttech.com/asp/Support/DownloadZone.asp or go directly to the FTP site as indicated below.

You will need the use of a TFTP server. (Contact your system administrator to obtain access to a TFTP server). Download the most recent firmware components from the FTP site ftp://ftp.connecttech.com/pub/BHN/ . These files include **BHNuClinux_X.XX.gz**, **BHNloader_VXXX.gz** and **BHNjffs2_X.XX.gz.**
These files contain all of the Blue Heat/Net Sync firmware. Follow the **update** command instructions for the SCM Command Reference to update each component.

Software Development

Hardware Information

The information provided in this section will offer data pertaining to the hardware components present within the Blue Heat/Net Sync unit. Hardware information documentation will encompass hardware resources, base address map, memory map and table, as well as, PLD registers.

Hardware Resources

The hardware resources available for use in software development for the Blue Heat/Net Sync, include; chip selects, interrupts, ColdFire MCF5272 GPIO.

Chip Selects

Chip Select *	Usage	Data Bus Width	Address Range	Cycle Termination
/CS0	This chip select is used to boot the CPU from the Flash. The Flash is 8M Byte in size.	16 bits	0xFE00 0000 – 0xFE80 0000 8 Mbytes	- Internal WS logic. - 5 wait states.
/CS1	Used to select the IUSCs and the internal PLD registers.	16 bits	0x4000 0000 – 0x4000 2000 8 kbytes	External /TA signal
/CS2	Dual Ported RAM. 32k Bytes total size	16 bits	0x8000 0000 – 0x8000 8000 32 kbytes	External /TA signal
/CS2	Undefined. For future expansion or debugging purposes. Available on debug header P11 on page 8 of Schematic	Undefined, but could be 8 or 16 bits	Undefined.	Undefined.
/CS7	Used for SDRAM. The SDRAM is 16M Bytes in size.	32 bits	0x0000 0000- 0x0100 0000 16 Mbytes	Internal WS logic and SDRAM controller.

Table 5: Chip Selects

Interrupts

INT *	Usage
/INT1, /INT2	IUSC logically or-ed interrupts. IUSC Interrupts can be muxed to any of the two **INT**s. One use is to mux all ports configured for Async mode to one IRQ and all ports configured for Sync mode to another interrupt. This should facilitate better software architecture and operation.
/INT3	PLD Interrupt. To support miscellaneous PLD section functions.
/INT6	Ethernet PHY Interrupt. Same PHY as other MCF5272 based Blue Heat/Net models.

* INTs are active low. Unused interrupts are pulled up to V+.

Table 6: Interrupts

ColdFire MCF5272 GPIO

GPIO Bit(s) *	Direction	Usage
PA0 – PA4, PA6	Undefined	Undefined. For future expansion or debugging purposes. Available on debug header P11 on page 8 of Schematic
PA5	Output	CPU Status LED. 1 = LED Off 0 = LED On.
PA8 – PA11	Input	PCB ID. Should be 0x4, for BHN Sync 4 Port.
PA13	Input	Pushbutton input. 1 = not pushed 0 = pushed
PA14	Output	Software forced hardware reset. 1 = Not reset. When setting up this GPIO, be sure to set port to a '1' before changing direction to output. 0 = forces a hardware reset

Table 7: ColdFire MCF5272 GPIO

*** All unused GPIO is pulled up with a pullup resistor.**

Base Address Map

Item	Address Range (hex)
ColdFire MBAR	1000 0000
Internal SRAM (4k Byte)	2000 0000
IUSC 0	4000 0000
IUSC 1	4000 0400
IUSC 2	4000 0800
IUSC 3	4000 0C00
PLD registers	4000 1000
DPR (32k Byte SRAM)	8000 0000
Flash (8 M Byte)	FE00 0000

Table 8: Base Address Map

Memory Map of IUSC and PLD Functions

ColdFire (5272) Bus:

A ColdFire CS# signal is used to select the entire region, setup with the following attributes…

- 8K (8192) byte region
- 16 Bit bus
- Use TA# signal to terminate the bus cycle (this places wait state generation in the hands of the PLD logic).
    - CSBR.EBI = 00b selects 16/32 SRAM/ROM mode
    - CSBR.BW = 10b selects 16 bit bus
    - CSOR.WS = 0x1F selects the use of the TA# signal
    - CSOR.BAM = as required selects size of region
    - CSOR.BA = as required sets 32 bit Base address of the region
    -

ColdFire Bus Addresses A0 through A12 are used to "address" all items

- A[12] divides the region into 2 (4096 byte) areas

IUSC Access:

A[12] Must be zero (0).

A[11..9] Are decoded into 8 functions which access the 4 IUSC devices

A11	A10	A9	IUSC selected	Function	Notes
0	0	0	0	Register Read/Write	
0	0	1	0	Interrupt Acknowledge	Write not allowed [1]
0	1	0	1	Register Read/Write	
0	1	1	1	Interrupt Acknowledge	Write not allowed [1]
1	0	0	2	Register Read/Write	
1	0	1	2	Interrupt Acknowledge	Write not allowed [1]
1	1	0	3	Register Read/Write	
1	1	1	3	Interrupt Acknowledge	Write not allowed [1]

[1] A write to these addresses are ignored, but the ColdFire bus cycle is properly terminated.

A[8] Is "connected" (inverted) to the IUSC S//D pin
0 = Selects "Serial Controller" registers in the IUSC device.
1 = Selects "DMA" registers in the IUSC device.

A[7] Is "connected" to the IUSC D//C pin
0 = Selects Serial "Control" registers
1 = Selects Serial "Data" registers

- A write places data into the Transmitter FIFO
- A read removes data from the Receiver FIFO

The word "connected" above, is used loosely to mean… The address bit is routed from the ColdFire bus to the indicated IUSC pin via the logic in the PLD.

A[6] Is not used (set to zero for all operations).

A[5..1] Addresses IUSC registers (see Memory Map Table below).

A[0] Not used explicitly, A0 (along with BS0# and BS1#) select byte size portions of IUSC registers.

PLD Resource Access:

A[12] Must be one (1).

A[11..5] Are not used.

A[4..2] Are decoded into selections of internal PLD "registers".

A4	A3	A2	Function	Notes
0	0	0	Real Time Clock	32 bit read/write (16 bit portions also accessible)
0	0	1	LED Control	16 bit read/write only
0	1	0	Port-1 Line I/F control	16 bit read/write only
0	1	1	Port-2 Line I/F control	16 bit read/write only
1	0	0	Port-3 Line I/F control	16 bit read/write only
1	0	1	Port-4 Line I/F control	16 bit read/write only
1	1	0	Control	16 bit read/write only
1	1	1	Status	16 bit read only

A[1] Is used to select the 16 bit portions of the Real Time Clock register.

A[0] Is not used.

PLD Memory Map Table

Address Offset (in hex)	Area (item) Accessed	Register Accessed	Notes
	IUSC Area		
	IUSC-0		
000	IUSC-0 Sreg [1]	CCAR	
002	IUSC-0 Sreg	CMR	
004	IUSC-0 Sreg	CCSR	
006	IUSC-0 Sreg	CCR	
008	IUSC-0 Sreg	PSR	
00A	IUSC-0 Sreg	PCR	
00C	IUSC-0 Sreg	TMDR	
00E	IUSC-0 Sreg	TMCR	
010	IUSC-0 Sreg	CMCR	
012	IUSC-0 Sreg	HCR	
014	IUSC-0 Sreg	IVR	

Address Offset (in hex)	Area (item) Accessed	Register Accessed	Notes
016	IUSC-0 Sreg	IOCR	
018	IUSC-0 Sreg	ICR	
01A	IUSC-0 Sreg	DCCR	
01C	IUSC-0 Sreg	MISR	
01E	IUSC-0 Sreg	SICR	
020	IUSC-0 Sreg	RDR(TDR)	**8/16 bit Serial Data (byte/word)** Writes go to the Transmitter FIFO Reads come from the Receiver FIFO
022	IUSC-0 Sreg	RMR	
024	IUSC-0 Sreg	RCSR	
026	IUSC-0 Sreg	RICR	
028	IUSC-0 Sreg	RSR	
02A	IUSC-0 Sreg	RCLR	
02C	IUSC-0 Sreg	RCCR	
02E	IUSC-0 Sreg	TCOR	
030	IUSC-0 Sreg	TDR(RDR)	**8/16 bit Serial Data (byte/word)** Writes go to the Transmitter FIFO Reads come from the Receiver FIFO
032	IUSC-0 Sreg	TMR	
034	IUSC-0 Sreg	TCSR	
036	IUSC-0 Sreg	TICR	
038	IUSC-0 Sreg	TSR	
03A	IUSC-0 Sreg	TCLR	
03C	IUSC-0 Sreg	TCCR	
03E	IUSC-0 Sreg	TC1R	
040→07F	---	---	Aliases of addresses 00→3F
080->09F	IUSC Data FIFO's (32 bytes)	RDR/TDR	**16 bit Serial Data transfers ONLY!!** Writes go to the Transmitter FIFO Reads come from the Receiver FIFO (useful for block data movements)
0A0→0FE			Aliases of 080->9F
100	IUSC-0 Dreg [2]	DCAR	
102	IUSC-0 Dreg	TDMR	
104	---	---	Reserved, do not access
106	IUSC-0 Dreg	DCR	
108	IUSC-0 Dreg	DACR	
10A→111	---	---	Reserved, do not access
112	IUSC-0 Dreg	BDCR	
114	IUSC-0 Dreg	DIVR	
116	---	---	Reserved, do not access
118	IUSC-0 Dreg	DICR	
11A	IUSC-0 Dreg	CDIR	
11C	IUSC-0 Dreg	SDIR	
11E	IUSC-0 Dreg	TDIAR	
120→129	---	---	Reserved, do not access
12A	IUSC-0 Dreg	TBCR	
12C	IUSC-0 Dreg	TARL	
12E	IUSC-0 Dreg	TARU	
130→139	---	---	Reserved, do not access

Address Offset (in hex)	Area (item) Accessed	Register Accessed	Notes
13A	IUSC-0 Dreg	NTBCR	
13C	IUSC-0 Dreg	NTARL	
13E	IUSC-0 Dreg	NTARU	
140→181	---	---	Reserved, do not access
182	IUSC-0 Dreg	RDMR	
184→19D	---	---	Reserved, do not access
19E	IUSC-0 Dreg	RDIAR	
1A0→1A9	---	---	Reserved, do not access
1AA	IUSC-0 Dreg	RBCR	
1AC	IUSC-0 Dreg	RARL	
1AE	IUSC-0 Dreg	RARU	
1B0→1B9	---	---	Reserved, do not access
1BA	IUSC-0 Dreg	NRBCR	
1BC	IUSC-0 Dreg	NRARL	
1BE	IUSC-0 Dreg	NRARU	
1C0→1FF	---	---	Reserved, do not access
200	IUSC-0		Interrupt Acknowledge (read only)
202→3FF	IUSC-0		Aliases of 200
	IUSC-1		
400→5FF	IUSC-1	As Above	Same registers as addresses 000→1FF
600	IUSC-1		Interrupt Acknowledge (read only)
602-7FF	IUSC-1		Aliases of 600
	IUSC-2		
800→9FF	IUSC-2	As Above	Same registers as addresses 000→1FF
A00	IUSC-2		Interrupt Acknowledge (read only)
A02→BFF	IUSC-2	---	Aliases of A00
	IUSC-3		
C00→DFF	IUSC-3	As Above	Same registers as addresses 000→1FF
E00	IUSC-3	---	Interrupt Acknowledge (read only)
E02→FFF	IUSC-3	---	Aliases of E00
	PLD Area		**See "PLD Registers" for details.**
1000	RTCU		Real Time Clock Upper
1002	RTCL		Real Time Clock Lower
1004	LEDC		LED Control
1006			Alias of 1004
1008	LIFC1		Port-1 Line I/F control
100A			Alias of 1008
100C	LIFC2		Port-2 Line I/F control
100E			Alias of 100C
1010	LIFC3		Port-3 Line I/F control
1012			Alias of 1010
1014	LIFC4		Port-4 Line I/F control
1016			Alias of 1014

Address Offset (in hex)	Area (item) Accessed	Register Accessed	Notes
1018	PLD_CNTRL		Control Bits
101A			Alias of 1018
101C	PLD_STATUS		Status bits
101E			Alias of 101C
1020→1FFF			Unused

[1] Sreg = Serial Register
[2] Dreg = DMA Register

PLD Registers:

<table>
<tr><th>Offset</th><th>Reg Name</th><th>R/W</th><th>Valid Bit</th><th>Bit Descriptions</th><th>Reset Values (Hex)</th></tr>
<tr><td>1000</td><td>RTCU
Real Time Clock Upper</td><td>R/W</td><td>D15..0</td><td>Control Bits: Read/Write only as a 16 Bit word.
<table>
<tr><td>15</td><td>14</td><td>13</td><td>12</td><td>11</td><td>10</td><td>9</td><td>8</td><td>7</td><td>6</td><td>5</td><td>4</td><td>3</td><td>2</td><td>1</td><td>0</td></tr>
<tr><td>Msk1</td><td>MP</td><td>MPP</td><td>MPO</td><td>IntEN</td><td>SE</td><td>EXT</td><td>ME</td><td>Msk0</td><td>X</td><td>X</td><td>H4</td><td>H3</td><td>H2</td><td>H1</td><td>H0</td></tr>
</table>
Msk1: On writes, set this bit to mask bits 14..8. This prevents previous settings of bits 14..8 from being changed.
MP: Minute Pulse (read only): Current State of Minute-Pulse signal (at the time of the read).
MPP: Minute Pulse Pending (read only): This bit is set to the same state as the MPO bit (when the MPO bit is written). When the MPO is written high, this bit goes low (=0) when the next selected Minute-Pulse edge occurs.
MPO: Minute Pulse Once: When low (=0), the selected Minute-Pulse edge always resets the Seconds value. When high (=1) the RTC increment is inhibited, then when the first selected Minute-Pulse edge occurs, the Seconds value will be zeroed, the MPP bit will be cleared and the RTC increment will be enabled. All subsequent Minute-Pulses edges will be ignored.
IntEN: Clock Interrupt Enable: Enable an interrupt to occur on each clock increment pulse. The Interrupt is cleared by reading (or writing) the RTC Lower Word (the Minutes/Seconds counter) or by disabling the interrupt. There is a dedicated interrupt signal to the Coldfire for the RTC interrupt.
SE: Seconds-Pulse Edge Select: Selects the edge (of the Seconds-Pulse) which causes the RTC increment, 0=falling, 1=rising.
EXT: External Time Base Select: 0=Internal Timebase (1 Hz), 1=External Timebase.
ME: Minute Edge select: Selects the edge (of the Minute-Pulse) which causes the RTC Seconds counter to be reset, 0=falling, 1=rising

Msk0: On writes, set this bit to mask bits 6..0. This prevents previous settings of bits 6..0 from being changed.
H4..0 Hours Setting, or reading (a number between 0 and 23).</td><td>0000</td></tr>
<tr><td>1002</td><td>RTCL
Real Time Clock Lower</td><td>R/W</td><td>D15..0</td><td>Control Bits: Read/Write only as a 16 Bit word.
<table>
<tr><td>15</td><td>14</td><td>13</td><td>12</td><td>11</td><td>10</td><td>9</td><td>8</td><td>7</td><td>6</td><td>5</td><td>4</td><td>3</td><td>2</td><td>1</td><td>0</td></tr>
<tr><td>Msk 1</td><td>X</td><td>M5</td><td>M4</td><td>M3</td><td>M2</td><td>M1</td><td>M0</td><td>Msk 0</td><td>X</td><td>S5</td><td>S4</td><td>S3</td><td>S2</td><td>S1</td><td>S0</td></tr>
</table>
Msk1: On writes, set this bit to mask bits 14..8. This prevents previous settings of bits 14..8 from being changed.
M5..0: Minute Setting, or reading (a number between 0 and 59)

Msk0: On writes, set this bit to mask bits 6..0. This prevents previous settings of bits 6..0 from being changed.
S5..0 Second Setting, or reading (a number between 0 and 59).</td><td>0000</td></tr>
<tr><td>1004</td><td>LEDC
LED Control Register</td><td>R/W</td><td>D15..0</td><td>Control Bits: Read/Write only as a 16 Bit word.
<table>
<tr><td></td><td></td><td></td><td></td><td></td><td></td><td></td><td></td><td colspan="4">Auto Flash Mode</td><td colspan="4">Direct Mode</td></tr>
<tr><td>15</td><td>14</td><td>13</td><td>12</td><td>11</td><td>10</td><td>9</td><td>8</td><td>7</td><td>6</td><td>5</td><td>4</td><td>3</td><td>2</td><td>1</td><td>0</td></tr>
<tr><td>X</td><td>X</td><td>X</td><td>X</td><td>X</td><td>X</td><td>X</td><td>X</td><td>P4</td><td>P3</td><td>P2</td><td>P1</td><td>P4</td><td>P3</td><td>P2</td><td>P1</td></tr>
</table>
P4, P4, P2, P1 Port numbers
Direct Mode: 1= LED on, 0 = LED off
Auto Flash Mode: 1=LED on for 40ms / off for 40ms, 0=No effect
X= Don’t care, fixed to 0.</td><td>0000</td></tr>
</table>

1008 100C 1010 1014	LIFC1,2,3,4 Line Interface Control 1008= Port 1 100C = Port 2 1010 = Port 3 1014 = Port 4	R/W	D15..0	Control Bits: Read/Write only as a 16 Bit word.	0007

15	14	13	12	11	10	9	8	7	6	5	4	3	2	1	0
X	DCDC	DCDS	ES	FSM	CTSC	CTSM1	CTSM0	RTS	DC	42W	DM	SPT	SP2	SP1	SP0

Important Note: These control bits are transferred to ALL the Line Interface PLD's by a serial interface. On each write to any of the 4 control registers, a serial transfer is started. The transfer takes about 16uS to complete. During this time NO write can occur to **any** of the 4 registers. A **Busy** signal is available to indicated that the transfer is in progress. (See the PLD_STATUS Register, below).

Basic Line Mode Control bits:

SP[2..0] **SP508 Line Mode setting bits:** See information in SP508 Data sheet. Power-up state=[111].
SPT **SP508 Terminator Enable:** 0=disable terminator, 1=enable terminator

Duplex Control and RTS Pin Control bits:

DM **Duplex Mode selection:** 0=Full, 1=Duplex.
42W **4/2 Wire mode selection:** 0=2wire (or ½ Duplex), 1=4wire (or Multi-Drop Slave).
DC **Duplex Control Source:** 0=RTS signal from IUSC, 1=TXComplete signal from IUSC.
RTS **RTS Pin Source Selection:** 0=RTS signal from IUSC, 1=TXComplete signal from IUSC.
Notes: When Full Duplex mode is selected the "42W" and "DC" bits settings can be changed but are ignored.

Triggered/Gated Transmission Control Bits

CTSM and FSM

FSM	CTSM[1]	CTSM[0]	FSYNC# pin on IUSC	CTS# pin on IUSC
X	0	0	---	Driven from Line Interface CTS signal
0	X	X	Driven directly from **Trigger** input signal (inverted)	---
0	0	1	---	CTS pulsed low for 15 clock cycles **[1]** as follows… If CTSC=0: clocked by Transmitter clock. If CTSC=1: clocked by PLD clock (14.66 MHz)
1	0	1	FSYNC Pulsed for 5 or 1 Transmitter clock cycles **[1][2]**	CTS pulsed low for 5 or 1 Transmitter clock cycles **[1][2]**
X	1	0	---	CTS is turned ON when appropriate TRG bit is ON (see TRG bits in the PLD_CNTRL register, below)

[1] Whenever the appropriate edge of the **Trigger** input signal occurs.
[2] The choice of 1 or 5 clock cycles is determined by the **previous** application of the "First Setup" pulse (Port3 of the IUSC device).
The 5 clock period FSYNC/CTS pulse only occurs once on the **first** Trigger edge, all following Trigger edges produce a 1 clock FSYNC/CTS pulse.

CTSC **CTS Pulse Clock Source:** 1=Internal PLD Clock, 0=Transmitter Clock [TxC]
ES **Trigger Edge selection:** 0=falling edge, 1=rising edge

Gated Reception Control Bits

DCDS **IUSC DCD Select:** 0=Line Interface DCD signal, 1=Driven by the appropriate TRG bit (in the PLD_CNTL register).
DCDC **DCD Clocked:** 0=Not clocked, 1=IUSC DCD is synchronized to the falling edge of RxC. (Valid for either of the above DCDS selections).

For Future Use

X Reserved for future use, Set to zero for Writes, zero on Reads

<table>
<tr><td>1018</td><td>PLD_CNTRL
Control Bits</td><td>R/W</td><td>D15..0</td><td>Control Bits: Read/Write only as a 16 Bit word.
<table>
<tr><td>15</td><td>14</td><td>13</td><td>12</td><td>11</td><td>10</td><td>9</td><td>8</td><td>7</td><td>6</td><td>5</td><td>4</td><td>3</td><td>2</td><td>1</td><td>0</td></tr>
<tr><td>IM[3]</td><td>IM[2]</td><td>IM[1]</td><td>IM[0]</td><td>TRG[3]</td><td>TRG[2]</td><td>TRG[1]</td><td>TRG[0]</td><td>X</td><td>X</td><td>IABT</td><td>SMIE</td><td>SR[3]</td><td>SR[2]</td><td>SR[1]</td><td>SR[0]</td></tr>
</table>
SR[3..0] IUSC Software Reset: SR[0]=Port1… SR[3]=Port4. Reset is asserted while bit is set to 1. Also, the “Line Interface Control”bits for the given Port, are set back to their power-up state.
SMIE Serial Master Interrupt Enable: This bit will enable all IUSC interrupts. If the SMIE bit is turned OFF, the Serial interrupt signal to the Coldfire are turned off, but the Interrupts Status bits remain valid.
IABT IUSC DMA operation Abort: Setting this bit will abort any DMA transfer underway, and is mainly used to abruptly stop autonomous IUSC operations.
TRG[3..0] TXRX GO: Used to enable the Transmission and Receiver via a hardware signal. These bits cause the CTS and the DCD signal to go ON. (See the CTSM[] and DCDS bits above).
IM[3..0] Map IUSC Interrupts: to Coldfire Interrupts. IM[p]=0 selects Interrupt-1, IM[p]=1 selects Interrupt-2. Where [p] is the port number (0to3).

Interrupt Information
All the IUSC interrupts are “gated” together and are presented on Coldfire External Interrupt pin #1 or pin #2 (as selected by the IM bits).
All other interrupts (only the Real-Time Clock at this time) are presented to the Coldfire External Interrupt pin #3.

For Future Use
X Reserved for future use, Set to zero for Writes, zero on Reads</td><td>0000</td></tr>
<tr><td>101C</td><td>PLD_STATUS
Status Bits</td><td>Read
Only</td><td>D15..0</td><td>Control Bits: Read only as a 16 bit word.
<table>
<tr><td>15</td><td>14</td><td>13</td><td>12</td><td>11</td><td>10</td><td>9</td><td>8</td><td>7</td><td>6</td><td>5</td><td>4</td><td>3</td><td>2</td><td>1</td><td>0</td></tr>
<tr><td>Busy</td><td>PBL</td><td>Rev[2]</td><td>Rev[1]</td><td>Rev[0]</td><td>ID[1]</td><td>ID[0]</td><td>RIS</td><td>IS2[3]</td><td>IS2[2]</td><td>IS2[1]</td><td>IS2[0]</td><td>IS1[3]</td><td>IS1[2]</td><td>IS1[1]</td><td>IS1[0]</td></tr>
</table>
IS1[3..0] Interrupt Status (Interrupt-1): IS1[p]=1 ≡ Interrupt active. Where [p] is the port number (0to3).
IS2[3..0] Interrupt Status (Interrupt-2): IS2[p]=1 ≡ Interrupt active. Where [p] is the port number (0to3).
RIS Interrupt Status (RTC): 1≡ Interrupt active.
ID[1..0] PLD ID: Begins at “1” and increments.
Rev[3..0] PLD Revision: Begins at “1” and increments.
PBL Push Button Latch: = 1 whenever the pushbutton was previously pressed (self-cleared at the end of the Read).
Busy LIFC Register Busy: This bit goes high (=1) whenever a Line Interface Control Register is written, and goes low (=0) whenever the register is available to be used again. (See the LIFC register above).</td><td>0900
(initially)</td></tr>
</table>

System Block Diagrams

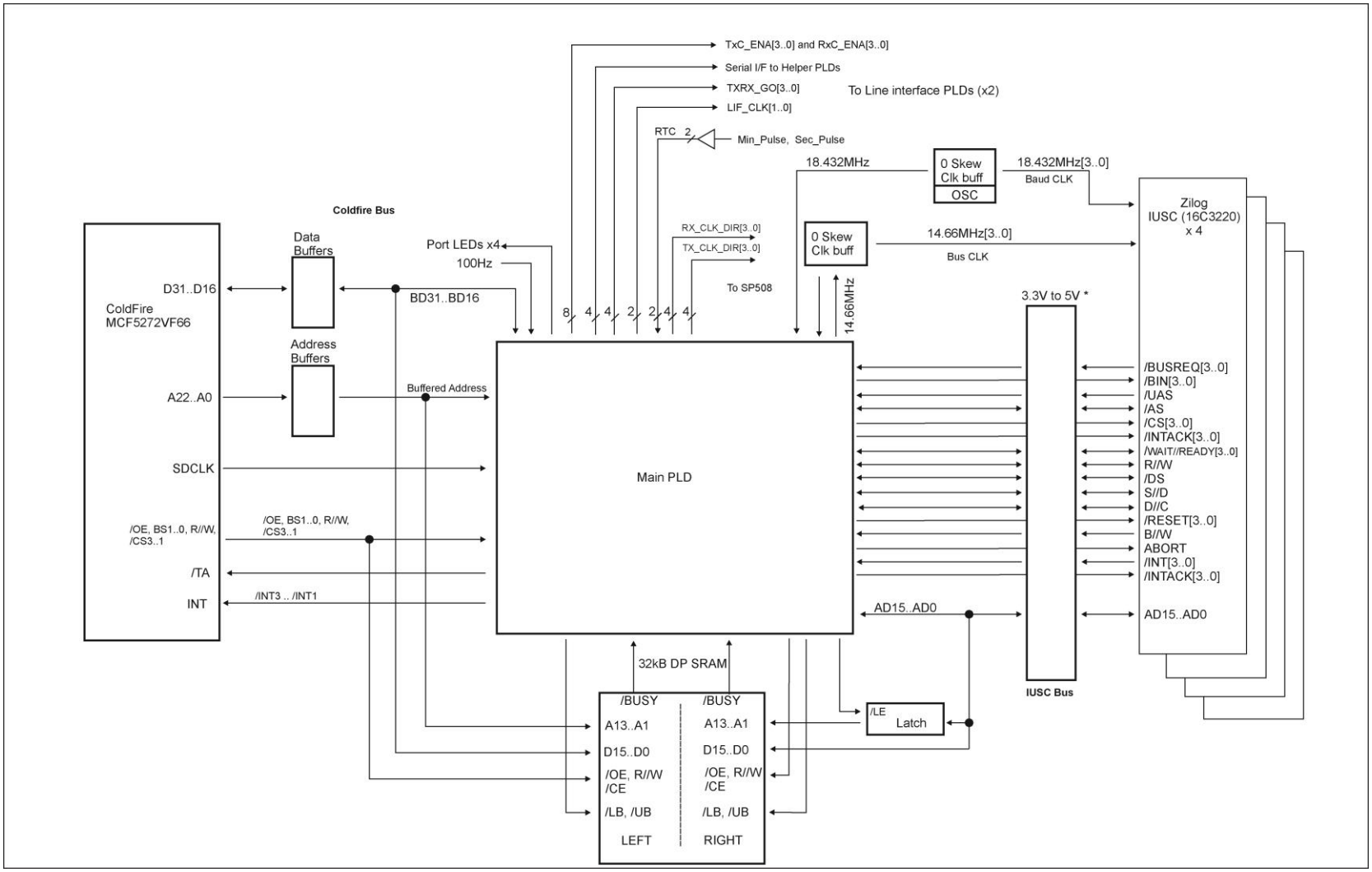

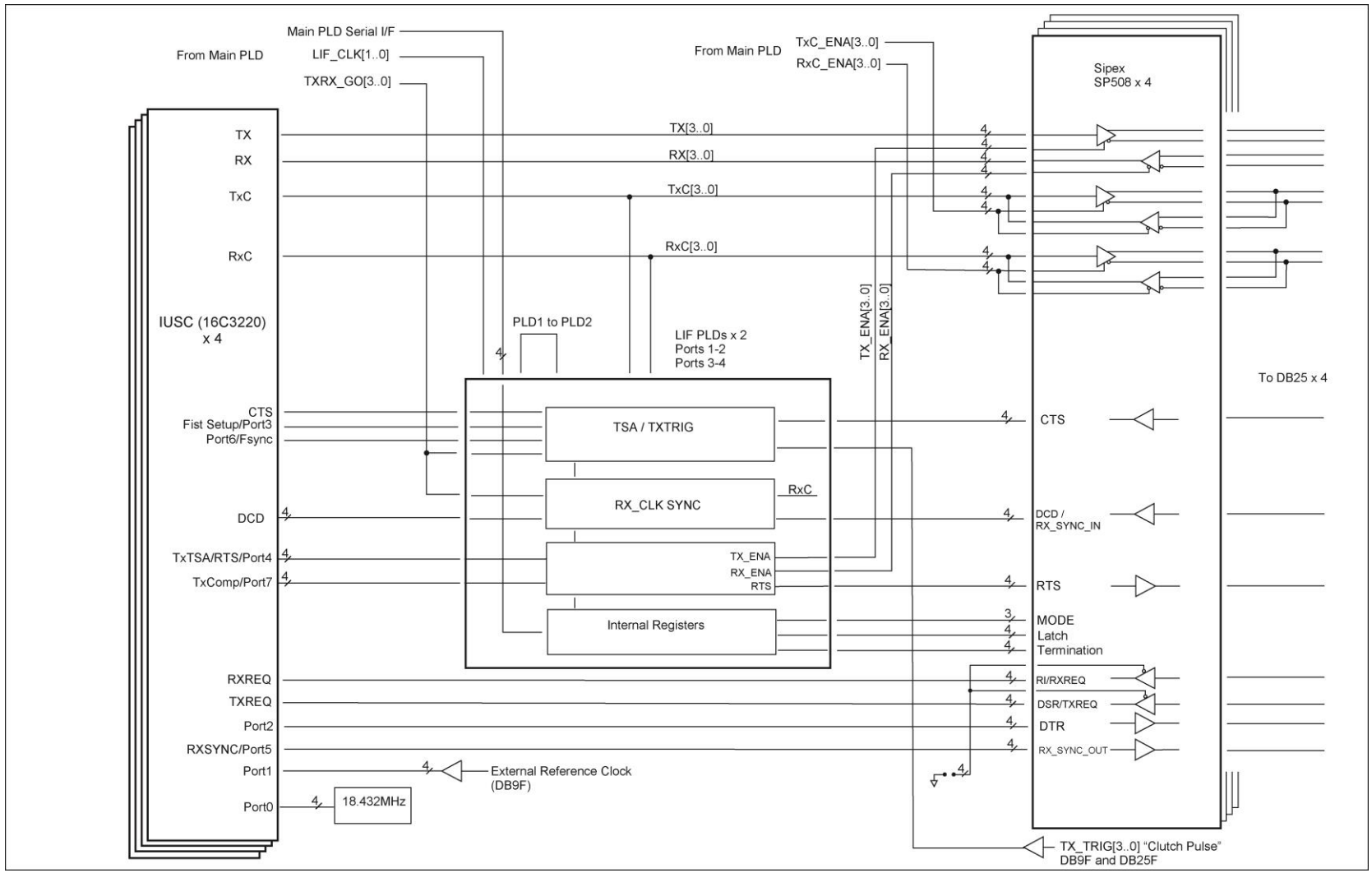
Main PLD Serial I/F
From Main PLD
LIF_CLK[1..0]
TXRX_GO[3..0]
From Main PLD
TxC_ENA[3..0]
RxC_ENA[3..0]
Sipex
SP508 x 4
TX
RX
TxC
RxC
TX[3..0]
RX[3..0]
TxC[3..0]
RxC[3..0]
IUSC (16C3220)
x 4
PLD1 to PLD2
LIF PLDs x 2
Ports 1-2
Ports 3-4
TX_ENA[3..0]
RX_ENA[3..0]
To DB25 x 4
CTS
Fist Setup/Port3
Port6/Fsync
TSA / TXTRIG
RX_CLK SYNC
RxC
DCD
TxTSA/RTS/Port4
TxComp/Port7
TX_ENA
RX_ENA
RTS
Internal Registers
CTS
DCD /
RX_SYNC_IN
RTS
MODE
Latch
Termination
RXREQ
TXREQ
Port2
RXSYNC/Port5
Port1
Port0
RI/RXREQ
DSR/TXREQ
DTR
RX_SYNC_OUT
External Reference Clock
(DB9F)
18.432MHz
TX_TRIG[3..0] "Clutch Pulse"
DB9F and DB25F

Port Settings, Clock Setup and General Settings

Required [conditions]
Optional [conditions]
(blank) means setting parameter is not required for the mode.
TBD means To be Determined at a later date.

Serial Mode (*smode*) ⇒ BHN_PortSettings ⇓	Async	MonoSync	BiSync	Trans-BiSync	HDLC
smode	Required	Required	Required	Required	Required
misc_receiver	TDB	TDB	TDB	TDB	TDB
misc_transmitter	TDB	TDB	TDB	TDB	TDB
r/txclk.ref_freq	Optional [1]	Optional [1]	Optional [1]	Optional [1]	Optional [1]
r/txclk.bps_error	Optional [1]	Optional [1]	Optional [1]	Optional [1]	Optional [1]
r/txclk.bps	Optional [1]	Optional [1]	Optional [1]	Optional [1]	Optional [1]
r/txclk.bps_frac	Optional [1]	Optional [1]	Optional [1]	Optional [1]	Optional [1]
r/txclk.async_div	Required				
r/txclk.dpll_div		Optional [2]	Optional [2]	Optional [2]	Optional [2]
r/txclk.ctr_div	Optional [3]	Optional [3]	Optional [3]	Optional [3]	Optional [3]
r/txclk.enc_dec	Required [1]	Required	Required	Required	Required
r/txclk.clk_tree.A	Required	Required	Required	Required	Required
r/txclk.clk_tree.B		Optional [4]	Optional [4]	Optional [4]	Optional [4]
r/txclk.clk_tree.C	Optional [5]	Optional [5]	Optional [5]	Optional [5]	Optional [5]
r/txclk.clk_tree.D	Required	Required	Required	Required	Required
r/txclk.clk_pin	Required	Required	Required	Required	Required
tx_pre_idle.pre_pat		Optional	Optional	Optional	
tx_pre_idle.pre_len		Optional	Optional	Optional	
tx_pre_idle.tx_idle	Required	Required	Required	Required	Required
line_mode	Required	Required	Required	Required	Required
duplex mode	Required	Required	Required	Required	Required
sync_addr.tx0		Required	Required	Required	
sync_addr.tx1			Required	Required	
sync_addr.tx_len		Required	Required	Required	

Serial Mode (*smode*) ⇒ BHN_PortSettings ⇓	Async	MonoSync	BiSync	Trans-BiSync	HDLC
sync_addr.rx0		Required	Required	Required	Required
sync_addr.rx1			Required	Required	Optional
sync_addr.rx_len		Required	Required	Required	
sync_addr.strip_sync		Optional	Optional	Optional	
dbits.t/rx	Required	Required	Required	Required	Required
tx_frac_stop	Required				
parity.t/rx	Required				
crc.tx_type		Required	Required	Required	Required
crc.tx_start		Optional [6]	Optional [6]	Optional [6]	Optional [6]
crc.tx_mode		Optional [6]	Optional [6]	Optional [6]	Optional [6]
crc.rx_type		Optional [6]	Optional [6]	Optional [6]	Optional [6]
crc.tx_start		Optional [6]	Optional [6]	Optional [6]	Optional [6]
tx_trig_gate	Required	Required			
rx_gate	Required	Required			

Required [1]: Must be NRZ or NRZ_INV

Optional [1]: Needed if a clocking source feeds either of the Baud Rate Generators. If the Receiver or Transmitter are clocked directly from certain Line Interface signals (RxC or TxC setup as inputs) and those Interface signals are setup as outputs, then the indicated parameters are required.
Optional [2]: Required only when the DPLL is part of the clocking tree setup.
Optional [3]: Required only when either Counter (CTR-0 or CTR-1) is directly clocking the Receiver, Transmitter, RxC or TxC signals.
Optional [4]: Only required when the clk_tree.A setting is CLK_DPLL (which is generally only used with Synchronous modes).
Optional [5]: Only required when the clk_tree.A or clk_tree.C setting selects a Baud Rate generator.
Optional [6]: Only required if CRC is enabled.

IUSC Clocking Logic:

The following diagram was scanned from the IUSC manual page 4-3 and corrections have been made. Do not use the diagram from the IUSC manual, use the corrected version we have provided below.

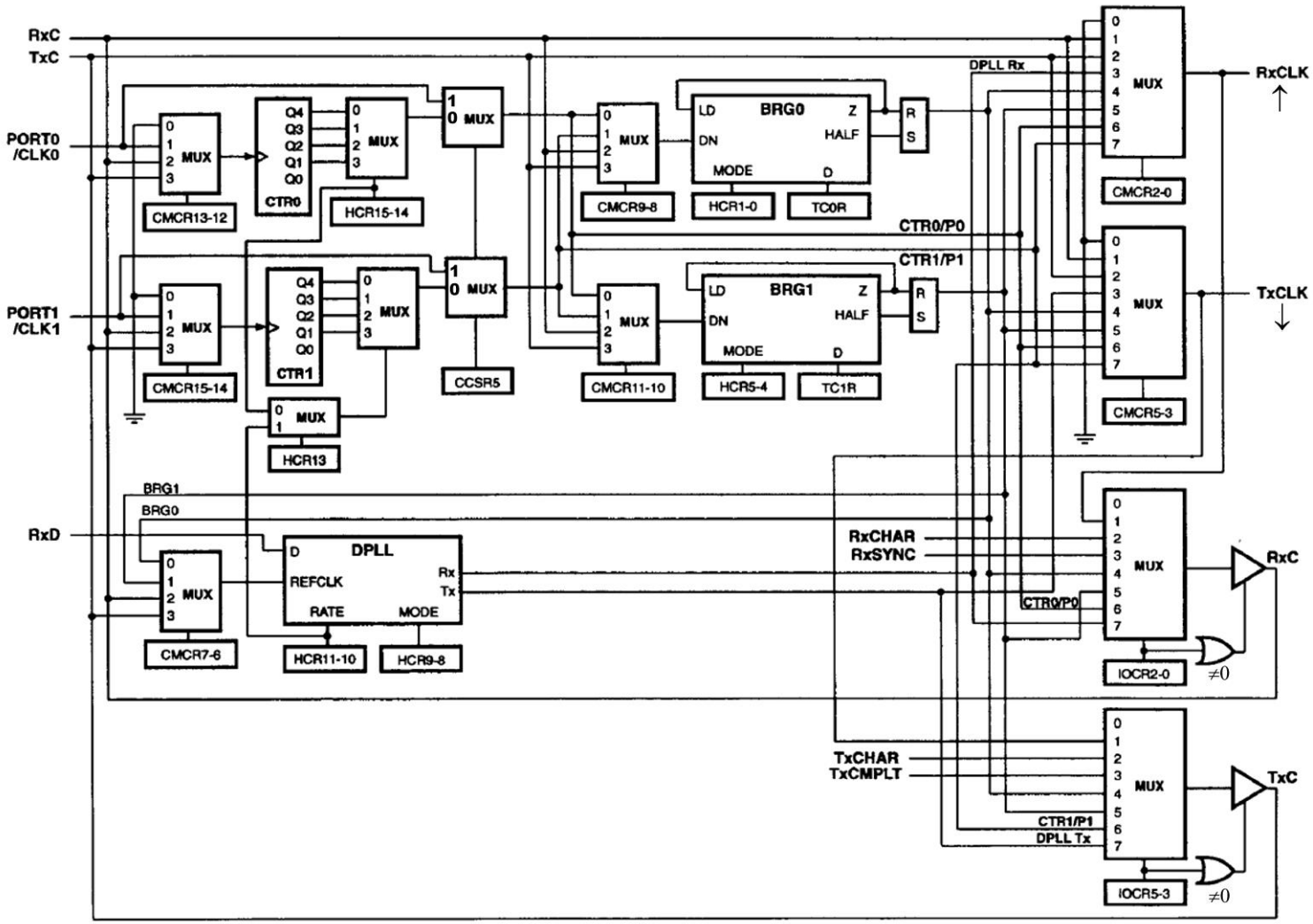
RxC
TxC
PORT0 /CLK0
PORT1 /CLK1
RxD
MUX
CMCR13-12
CMCR15-14
CMCR7-6
CTR0
CTR1
HCR15-14
HCR13
HCR11-10
HCR9-8
CCSR5
CMCR9-8
CMCR11-10
BRG0
BRG1
LD
DN
MODE
HALF
Z
D
HCR1-0
TC0R
HCR5-4
TC1R
R
S
DPLL
REFCLK
RATE
Rx
Tx
BRG1
BRG0
CTR0/P0
CTR1/P1
DPLL Rx
RxCHAR
RxSYNC
TxCHAR
TxCMPLT
DPLL Tx
CMCR2-0
CMCR5-3
IOCR2-0
IOCR5-3
RxCLK
TxCLK
RxC
TxC
≠0

Appendix

Blue Heat/Net Sync Specifications

Operating Environment

4 port model: 0ºC to 60ºC (32ºF to 158ºF)

Communications

Baud Rates:
Synchronous: Up to 115Kbps, possibly higher depending on application
Asynchronous: 230.4 Kbps

Custom baud rates are also available. Please contact our sales@connecttech.com department for information.

ESD Protection

15kV

Power

Rev A models: 5V (2.5A) power input using a DC barrel or Phoenix screw terminal connector.

Rev B models: 5V (2.5A) to 26V (450mA) power input using a DC barrel or Phoenix screw terminal connector.

Connectors

Serial I/O: DB25 Female
Auxiliary I/O: DB9 Female
DC Power: Standard DC Power connector or Phoenix screw terminal
Ethernet: RJ45

Dimensions

Blue Heat/Net Sync

- Length: 133 cm/5.24 inches
- Width: 244 cm/9.61 inches
- Height: 43 cm/4.69 inches

Compliant with 1U 19” rack specifications

Cable and Power Supply Options

Blue Heat/Net Sync products are available in a variety of configurations. Please contact the Connect Tech sales@connnecttech.com *department for more information on your model number.*

Protocol Descriptions

The Blue Heat/Net Sync supports a variety of protocols. The following is a brief explanation of each and how they are implemented.

ARP

Address Resolution Protocol, a method used to find a unit's Ethernet MAC address from its Internet address.

BOOTP

Bootstrap Protocol, a protocol that allows a unit to boot from the network instead of using information stored on the Blue Heat/Net Sync (typically in Flash memory).

DHCP

Dynamic Host Configuration Protocol, a protocol that provides a means to dynamically allocate IP addresses to computers on a local area network. The system administrator assigns a range of IP addresses to DHCP and each client device on the Local Area Network requests an IP address from the DHCP server. The request and grant process uses a lease concept with a controllable time period. The Blue Heat/Net Sync offers this as a configurable option; it can either be turned on or the user can set a fixed IP on the unit.

HTTP

HyperText Transfer Protocol, a standardized Protocol that Web Browsers use to connect to web pages. It is used to provide web based configuration tools on the Blue Heat/Net.

IP

Internet Protocol, a common addressing scheme for modern networks. Used in conjunction with TCP to form TCP/IP (see below)

RARP

Reverse Address Resolution Protocol, a method to find a unit's Internet address from a MAC or Ethernet address.

TCP

Transmission Control Protocol, a lossless protocol, requiring a handshake to insure that data is not lost during transmission. Used in TCP/IP to form the main data transfer pathway between Blue Heat/Net Sync units and the host computer.

Telnet

A terminal-protocol that can be run over TCP/IP to connect to a remote unit. It is one of the methods used to configure the Blue Heat/Net Sync unit.

TFTP

Trivial File Transfer Protocol, a protocol used to download firmware to the Blue Heat/Net.

UDP

User Datagram Protocol, a protocol used when handshake is not critical. It is used by TFTP (see above) and for auto discovery of the units.

Pinouts

DB-25 Female Pinouts

DB25F		Line Mode				
Pin #	Signal Name V.28 in brackets	V.35	EIA-530	RS232 (V.28)	EIA-530A	X.21 (V.11)
14	TX+	V.35 [4]	V.11	Hi-Z	V.11	V.11
2	TX- (TX)	V.35 [4]	V.11	V.28	V.11	V.11
16	RX+	V.35 [4]	V.11 [1]	Hi-Z	V.11 [1]	V.11 [1]
3	RX- (RX)	V.35 [4]	V.11 [1]	V.28	V.11 [1]	V.11 [1]
23	DTR+	Hi-Z	V.11	Hi-Z	Hi-Z	V.11
20	DTR- (DTR)	V.28	V.11	V.28	V.10	V.11
19	RTS+	Hi-Z	V.11	Hi-Z	V.11	V.11
4	RTS- (RTS)	V.28	V.11	V.28	V.11	V.11
13	CTS+	Hi-Z	V.11	Hi-Z	V.11	V.11
5	CTS- (CTS)	V.28	V.11	V.28	V.11	V.11
21	DSR+	Hi-Z	V.11	Hi-Z	Hi-Z	V.11
6	DSR- (DSR)	V.28	V.11	V.28	V.10	V.11
10	DCD/RX_SYNC_IN+ [5]	Hi-Z	V.11	Hi-Z	V.11	V.11
8	DCD/RX_SYNC_IN- [5] (DCD)	V.28	V.11	V.28	V.11	V.11
11	TXC+ [2]	V.35 [4]	V.11 [2]	Hi-Z	V.11 [2]	V.11 [2]
24	TXC- [2] (TXC)	V.35 [4]	V.11 [2]	V.28	V.11 [2]	V.11 [2]
9	RXC+ [2]	V.35 [4]	V.11 [2]	Hi-Z	V.11 [2]	V.11 [2]
17	RXC- [2] (RXC)	V.35 [4]	V.11 [2]	V.28	V.11 [2]	V.11 [2]
15	(TXC)	NC	NC	V.28	NC	NC
12	RX_SYNC_OUT- [6]	V.28	NC	V.28	NC	NC
22	RI (RI)	V.28	V.10	V.28	V.10	Hi-Z
18	TX_TRIGGER	[7]	[7]	[7]	[7]	[7]
7, 1	SR	SR	SR	SR	SR	SR

[1] 120 ohm resistor applied between the (+) and (-) signals.
[2] 120 ohm resistor applied between the (+) and (-) signals when the signal is an input.
[3] This signal can be programmed to be a input or an output.
[4] V.35 Termination Network is applied between (+) and (-) signals.
[5] External Sync input used to enable or disable the receiver. This pin is used in external Sync mode. A logical low will enable the receiver.
[6] This output indicates that the Receiver has received a RX Sync character. It could also be used as a general purpose I/O signal.
[7] See the table titled Auxiliary Connector under TX_TRIGGER for details.

NC means DO NOT CONNECT.

Signal Description:

Mode	Equivalent Standard	Electrical	Typical Voltage
V.10	RS-423	Single ended	+/- 5VDC
V.11	RS-422 / RS485	Differential	1.5VDC to 4.5VDC
V.28	RS-232	Single ended	+/-12VDC
V.35	V.35	Differential	550mVDC

Table 9: DB-25 Female Pinouts

DB-9 Female Pinouts

DB9F Pin	Signal Name [1]	Functional	Notes
1	RTC_Clear	Clears and holds the seconds count of the Real Time Clock at 00.	[3], [6]
2	RTC_Seconds	Provides the external time base for the Real Time Clock. Internal time base is 1Hz	[3], [5]
3	GND	Signal reference for all signals	
4	EXT_REF_CLK	0-20MHz clock input	[2]
5	GND	Signal reference for all signals	
6	TX_TRIGGER_P1	Transmission trigger for port 1	[3], [4], [5]
7	TX_TRIGGER_P2	Transmission trigger for port 2	[3], [4], [5]
8	TX_TRIGGER_P3	Transmission trigger for port 3	[3], [4], [5]
9	TX_TRIGGER_P4	Transmission trigger for port 4	[3], [4], [5]

[1] All signals are inputs.
[2] Electrical properties for External Reference clock input:

- +/- (1-10)Vpp AC sine wave
- +/- (3.3-10Vpp square wave.
- 10-20MHz Frequency range.
- Capacitive coupled input.
- Must be referenced to GND pin.
- TTL compatible. For example 0-3.3V or 0-5V will work.

[3] Electrical properties:

- +/- (3.3- 10)Vpp pulse.
- Minimum pulse width is 100ns seconds.
- Capacitive coupled input.
- Must be referenced to GND pin.
- TTL compatible. For example 0-3.3V or 0-5V will work.

[4] Used for Asynchronous transmissions. When the mode is enabled, the Blue Heat/Net Sync will transmit exactly one byte of data when the TX_TRIGGER input changes state. These same signals are available on the individual DB25 port connectors.
[5] The input is edge sensitive and can be configured for negative or positive edge sensitivity.
[6] The input is level sensitive and can be configured for 1 or 0 level sensitivity.

Table 10: DB-9 Female Pinouts

Multi-drop Communications Using V.11 / RS422/RS485 Line Modes

When wiring multi-drop RS-485 networks, it is necessary to wire the devices in a "Daisy Chain", they must not be wired with a "Star" topology, see diagram.

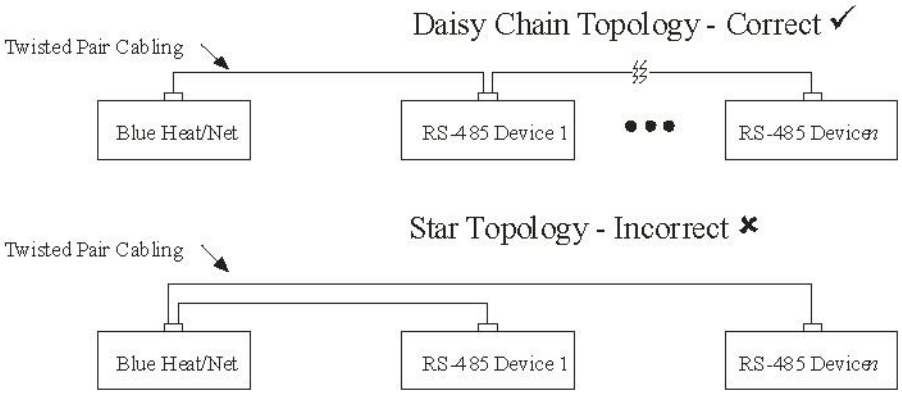

Rack Mount Option:

Blue Heat/Net Sync can be rack mounted using the option rack mount kit part number MSG029.

Default Settings

Network Settings

Blue Heat/Net Sync IP address	192.168.42.1
Server IP address	0.0.0.0 (used for firmware downloads)
Gateway IP address	0.0.0.0
Subnet Mask	255.255.255.0
Broadcast IP address	255.255.255.255 (used by the bootp process)
Domain Name Server IP address:	0.0.0.0 (used for firmware downloads)
Domain Name	blueheat.net
Host Name	BHNsssssssss (where sssssssss is the BHN serial number)
TCP Port	49152 (0xC000)
DNS IP	0.0.0.0

Boot Settings

Default enabled:
- Boot from Flash

Default disabled:
- use BOOTP
- use TFTP

Delay: 30 (seconds)

SCM Operation Settings

Password:	password
Password Prompting:	enabled
Loader Filename:	BHNloader_vvv.gz

(where vvv is the version number of the Loader, current at the time the unit was manufactured).

Line Setting: See Getting Access to the SCM section.

Common Configuration Setups

Static IP Setup

In some networking environments it is best to have the IP address set to a fixed value. The advantage is that since it is fixed, connecting to it can be a lot simpler.

Static IP is often the best choice if you are trying to connect via WAN or through a Firewall. It can be difficult to resolve the Blue Heat/Net Sync's IP address if you use DHCP in this instance.

The default configuration is a static IP of 192.168.42.1. In most cases this will not be the address you want to use in your network. You can change it using two different methods:
Serial Configuration Manager (SCM)
A direct serial connection to on of the serial ports on the Blue Heat/Net Sync.
Or
Web Configuration Manager (WCM)
Using a web browser like Internet Explorer to connect to the unit.

Refer to the manual sections for specific details on using the SCM and WCM.

Example:
You want to configure a static IP on a Blue Heat/Net Sync of 198.182.196.15. The network's server is at 198.182.196.1 and the gateway is 198.182.196.2. The subnet mask is 255.255.255.0.

Using SCM

Log onto the Blue Heat/Net Sync. There is no login necessary if using SCM. The default password for the SCM is **password**.

Enter **net net=198.182.196.0**. This will set 198.182.196.0 to the server, gateway and the unit's IP in one step.
Enter **net my_ip=15**. This will set the unit's IP to 198.182.196.15.
Enter **net server_ip=1**. This will set the server IP to 198.182.196.1.
Enter **net gateway_ip=2**. This will set the gateway IP to 198.182.196.2.
Enter **net subnetmask=255.255.255.0**. This will set the subnet mask.
Enter **net dns_ip=3**. This will set the DNS IP to 198.182.196.3
Enter **net dhcp=no**. This will turn off DHCP on the unit.
Enter **save**. This will save the configuration set above to flash memory.
Enter **exit**. The unit will reboot using the new settings.

Using WCM

Connect to the Blue Heat/Net Sync using a web browser by entering the current IP of the unit in the address.
Log on by supplying the username and password. The default login is **wcm** and the default password is **password**.
Select the **Blue Heat/Net Sync Settings** page and fill in the server IP, Blue Heat/Net Sync IP, Gateway IP, DNS IP and subnet mask as defined above.
Ensure the Use DHCP option is set to **no**
Click on the **Save to Flash** button to store the changes.

DHCP Setup

In many modern networks IP numbers are not static but are automatically assigned by a DHCP server and can change over time or on each power up.

DHCP must be enabled on the Blue Heat/Net Sync because it is shipped to use a default static IP (192.168.42.1)

Using SCM

Log onto the Blue Heat/Net Sync. The SCM does not require a login. The default password for the SCM is **password**.
Enter **net dhcp=yes**. This will turn on DHCP on the unit.
Enter **net dns_ip=3**. This will set the DNS IP to 198.182.196.3
Enter **save**. This will save the configuration we just set to flash memory.
Enter **exit**. The unit will reboot using the new settings.

How the Blue Heat/Net Sync Boots Up

Each time the Blue Heat/Net Sync is powered-up or rebooted with an appropriate command, a certain sequence of software execution occurs.

The **Booter** runs from flash memory first. Its job is to perform the following:
Setup the embedded processor
Validate at least one of the redundant **Loaders** (via a CRC check).
Load a validated **Loader** into RAM memory.
Run the **Loader**.
If the **Booter** discovers that both **Loader** programs are defective (erased or faulty CRC calculation), an error code is displayed on the LEDs of the Blue Heat/Net Sync.
The **Loader** runs from RAM memory. Its job is to perform the following:

- Update any required CDS items.
- Determine if the SCM application will be entered. This is accomplished by scanning the designated serial ports, for a period of time, to determine if a correct password is entered. If the password is found the SCM application will be entered. (see the SCM Command Reference command for details of these settings).
- Locate, load and run an Operating System (uClinux). (As shown in the following boot-up flow chart).
- Run the main Operating System (uClinux).
- Operating System launches port personality default **ctid**

Bootup Sequence

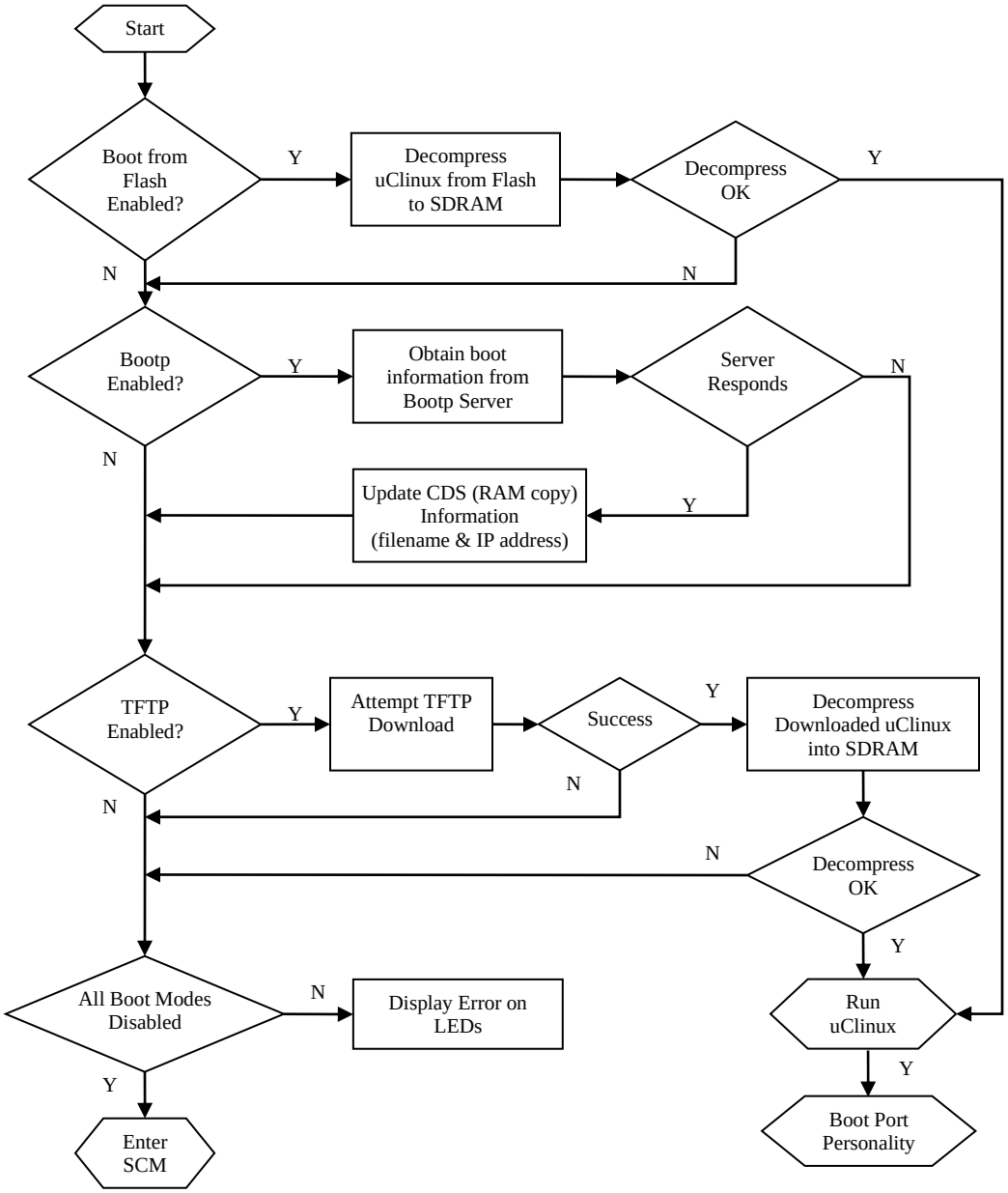

Figure 29: Bootup Sequence

Flowchart of Special Operations Mode using the reset button

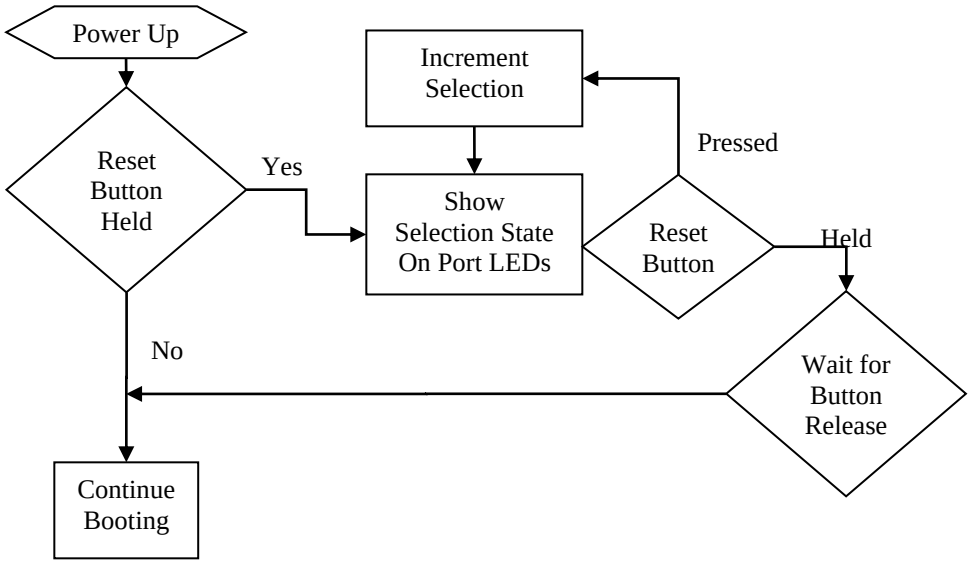

Figure 30: Bootup Sequence via Reset Button

Asynchronous Communications Tutorial

The Blue Heat/Net Sync features four synchronous/asynchronous serial communication ports. Asynchronous communication is a simple, cost effective means of terminal serial communication. For this reason, it is widely used for communications on personal computers, bar codes readers, printers, terminals and much more. The following documention represents a basic tutorial for asynchronous communications. For a tutorial on synchronous communications, please refer to the **Z16C32 IUSC User's Manual (DOC ID DC8292)** on the Zilog website.

In asynchronous serial communication, the electrical interface is held in the idle position between characters, also referred to as "mark". A change in signal level (known as space level) indicates the start of transmission of a character. The receiver recognizes this change as a "start bit". Once the start bit has been sent, the transmitter sends the actual data bits. In typical asynchronous communications there may be 5, 6, 7, or 8 data bits, depending on the application. Both the receiver and the transmitter must be set to the same number of data bits, baud rate and stop bits. Stop bits can be 1, 1.5, or 2 bit periods in length. When the transmitter has sent all the data bits, it sends a stop bit. This stop bit signals to the receiver that the data has finished transmission. The stop bit is the same state as the idle or mark state.

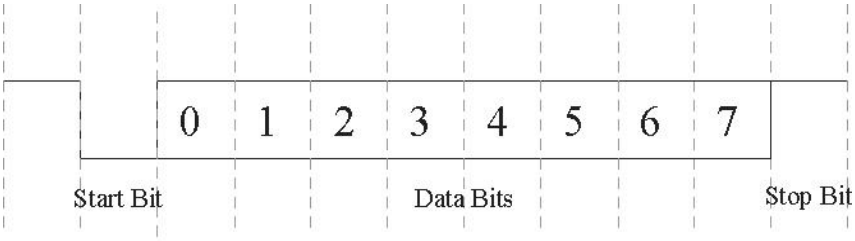

Figure 31: Typical Asynchronous Date Frame

Serial Line Interface Tutorial

RS-232 Line Interface:

RS-232 is the simplest, least expensive line interface standard, the Sipex tranceivers used on the Blue Heat/Net Sync refer to RS232 as V.28 mode. It is also referred to as EIA232 and TIA/EIA-232. The RS-232 specification signals levels of +3V to +15V for a logic 0 or Space, and -3V to -15V for a logic 1 or Mark. The Blue Heat/Net Sync has RS-232 signal levels with a typical range of +/- 8 Volts. The maximum cable length you can use with RS-232 is dependant on a number of factors including:

Baud rate: The higher the baud rate, the shorter the cable length must be.

Cable quality: Quality largely refers to the capacitance of the cable. A higher capacitance (usually specified as pF or pico Farads per foot) dictates a lower baud rate, and a shorter maximum length. Low capacitance computer cables for RS-232 applications are available from all wire and cable suppliers.

You can usually operate with cable lengths of up to 100 feet (30 m) at baud rates up to 115.2 Kbps using low capacitance cable. For higher baud rates such as 230.4 Kbps and up, we recommend keeping the cable lengths to within 25 feet (7.6 m).

The TIA/EIA232 specification specifies two connectors: the DB-25 and the DB-9. Each of these connectors has a standardized pinout. Refer to the Pinouts section of the manual for the DB-25 RS-232 (V28) pinout.

Differential Line Interfaces:

The Blue Heat/Net Sync features Sipex SP508 multi-protocol transceivers. These transceivers features the following differential line standards.

V.11: A differential line interface with signal levels compatible with RS-485 and RS-422.
V.10: A single ended line interface that can be wired such that it will have some of the noise cancelling features of RS485 (V.11). This interface is also called RS-423.
V.35: A differential line interface that operates in a current loop. The electrical levels are about +/- 550mV.

RS485/RS422/V.11 Details

V.11, RS-485, or TIA/EIA485, is a differential line interface standard capable of high baud rates over long cables. The Sipex tranceivers used on the Blue Heat/Net Sync refer to RS-485 as V.11 mode RS-485 is fully compatible with RS-422; which is considered a subset of RS-485.
The use of differential transmitters and receivers ensures RS-485 communications are reliable and robust. This means two wires are used to transmit or receive a signal. One wire carries the true or non-inverted signal; the other wire carries the inverted signal. The non-inverted signal is labelled with a (+) and the inverted is labelled with a (-). The differential communication refers to the (+) as “TXB” and the (-) as “TXA”.
Any noise injected into the wires is cancelled at the receiver, leaving only the original, undistorted data signal. Twisted pair cables are always used in RS-485, this ensures that the communications are robust and as error free as possible. RS-485 signal levels are between 0 and 5 Volts, the differential voltage can be as little as 200mV.

Differential can operate in three different modes: a 4-wire full duplex interface, 4-wire multi-drop full duplex interface and a 2-wire half duplex interface. A full duplex (bi-directional) differential communication interface requires at least four wires, two for transmit and two for receive. A half duplex interface only requires two wires, this provides a cost effective cabling solution.

Multi-drop is a great feature of RS-485. Multiple RS-485 devices can be bussed together in a daisy chain type fashion to create a network. Up to 32 devices may be connected together on the same network. In multi-drop networks, one of the devices (usually the computer) is designated as the master, and all the other devices are designated as slaves. All communication is initiated by the master. The master and slave designations are established by your communications application.

Basic 4-Wire, Full Duplex Communications:

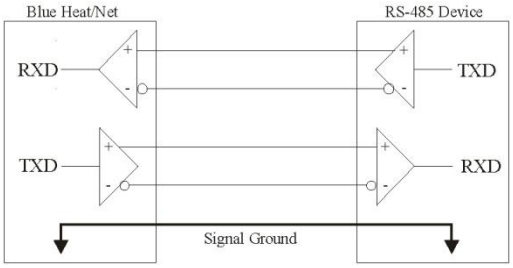

In a 4-wire RS-485 network, two devices are connected together, for example your Blue Heat/Net Sync RS-485 port and an RS-485 device.

Multi-drop 4-Wire, Full Duplex Communications:

In a multi-drop 4-wire differntial network, two to 32 devices are connected together. Note that each RS-485 receiver counts as a device or "load". In this multi-drop mode of communication, a master slave protocol must be enforced, that is, all communication is initiated by the master, in this case a Blue Heat/Net Sync. The communication is "full duplex", meaning that receive and transmit traffic occur on different pairs of wires. The Blue Heat/Net Sync can receive and transmit data from/to a device at the same time.

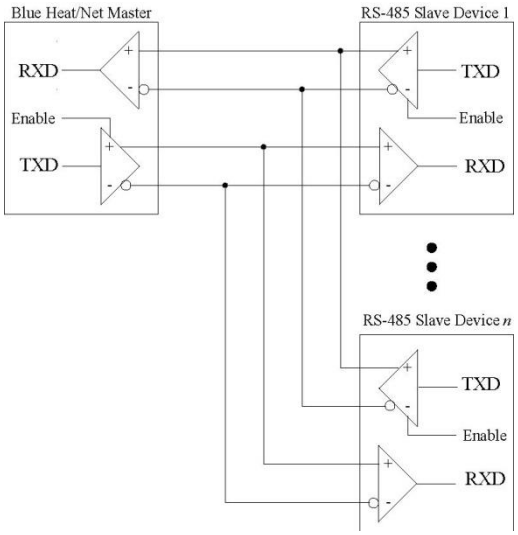

Basic - Wire, Half Duplex Multi-drop Connection:

In a 2-wire differntial network, two to 32 devices are connected together. Note that each receiver counts as a device or "load". In this multi-drop mode of communication a master slave protocol must be enforced, that is, all communication is initiated by the master, in this case a Blue Heat/Net Sync. The communication is "half duplex", meaning that receive and transmit traffic occur on the same wire. The Blue Heat/Net Sync and devices can not receive data and transmit data at the same time.

Note that the Receiver +/- and the Transmitter +/- signals are connected together. This is performed at the DB-9 connectors. All communication between devices occurs over a single pair of wires; this can lower the cost of wiring your network.

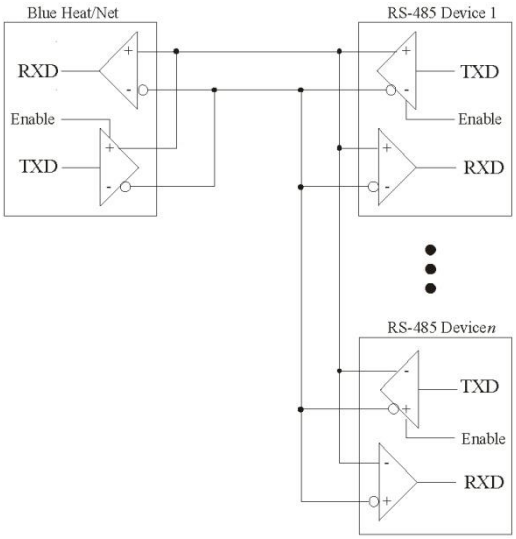

Bus Contention on Differential Multi-drop Networks:

Bus contention occurs when two or more devices enabled on a bus attempt to run the bus to opposite logic values. From the diagram above, we can see that there are multiple differential transmitters (TXD) on the bus. To avoid the bus contention problem, the differential transmitter features a tri-state, or high impedance mode controlled by an input pin (enable). Software and hardware in the Blue Heat/Net Sync and the differential devices will always place its transmitter into the high impedance mode when not transmitting. This feature is managed by the Blue Heat/Net Sync and is fully transparent to your application.

For example, in a multi-drop network, the differential transmitter is enabled prior to the master initiating transmission. When transmission is complete, the transmitter is placed in high impedance mode. Each slave will receive that transmission from the master. (A protocol must be in place to address, or select, the desired slave device, but that discussion is beyond the intentions of this tutorial, and is entirely application dependent). When the slave device has received the data, it will respond by enabling its transmitter and transmitting data onto the bus, then placing its transmitter into high impedance mode, just as the master did.

Termination Resistors in Differential Networks

Termination Resistors in Differential Networks:

Differential networks often benefit from the installation of termination resistors. Termination is rarely required for lower baud rates, for example 9600 baud or less. However, differential networks are *transmission lines*, and can suffer from the electrical effects of ringing, or undershoot and overshoot, all of which can cause data errors, especially at higher baud rates, like 115.2 Kbps. Termination resistors should always be installed at the extreme ends of the network, as close to the differential transceiver circuits as possible, as outlined in the diagram below.

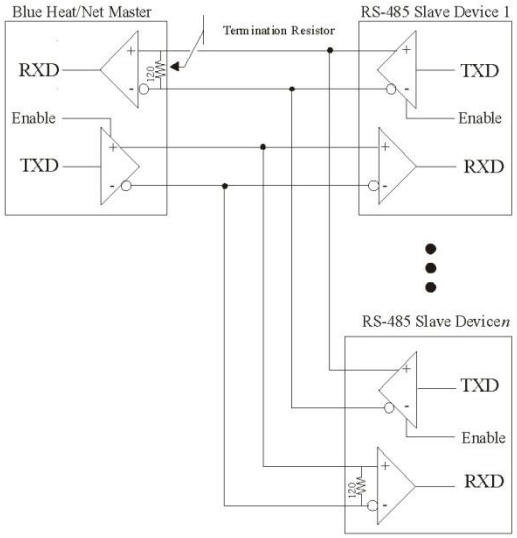

NOTE: The Blue Heat/Net Sync features software selectable termination.