Connect Tech

M.2 GPS

GNSS RECEIVER

PART NUMBER: M2G201

The M.2 GPS is a GNSS receiver based on the very small industry standard M.2 Type-2242-S3-B & Type-2230-E form factor.

Using the USB bus, the M.2 GPS provides global positioning and time-stamp information, while taking up little space and power within a system. Also considering the existing support for Windows and Linux, the M.2 GPS can be easily integrated into any existing system, as well as easily implemented into new systems.

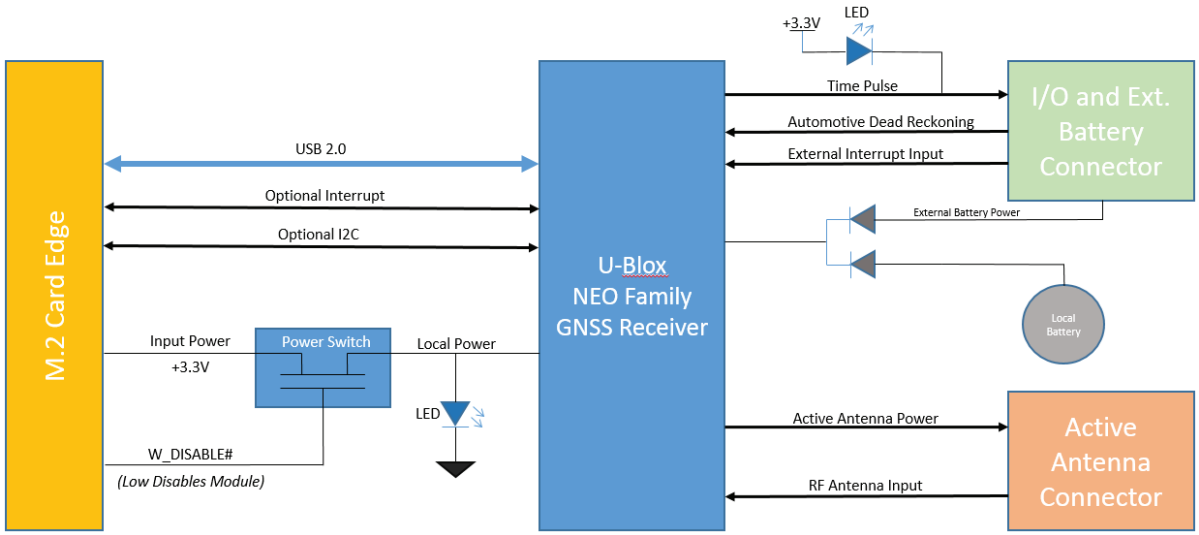

FEATURES

- ✓ Provides global positioning and time-stamp information
- ✓ Uses little space and power within a system
- ✓ Easily integrates into any existing system using an M.2 Type-2242-S3-B or -2230-E key Connector, M2G207 only
- ✓ -40°C to +85°C

SPECIFICATIONS

Dimensions	42 mm x 22 mm (M.2 Type-2242-S3-B & Type-2230-E key M2G207 only)
GPS	GPS, GLONASS, QZSS, Galileo UBX, RTCM, and NMEA protocols
Antenna	MSG095, VTGPSA-9, Active GPS/GLONASS Antennas only
I/O	TIMEPULSE output syncronized with GPS time grid External Interrupt input External Battery input Forward/Reverse and Wheeltick inputs for Automotive Dead Reckoning
Antenna Connector	HSC (MHF4), support for active antennas only
Cables	CBG214 (RF Connector to SMA) CBG162 (IO Connector Cable)
Environmental	Storage/Operating Temperature: -40° C to +85° C (-40° F to 185° F)
Warranty and Support	2 Years

RoHS

Specifications subject to change without notice. ©2023 Connect Tech Inc. All trademarks are property of their respective holder. CTIX-00446(0.05) - 2023-11-03

Connect Tech Inc. | 489 Clair Rd. W., Guelph ON Canada | **Tel:** 519.836.1291 **Toll:** 800.426.8979 (North America) | **Email:** sales@connecttech.com | **www.connecttech.com**